www.teji-valves.com

LEADING THE GLOBAL VALVE INDUSTRY



TEJI VALVE GROUP CO. LTD
Address: Anfeng Ind. Zone(North Zhangbao Rd.),
Oubei, Yongjia 325102, Zhejiang, P.R. China.
Tel: 86-577-67354000 86-577-67998922
Fax: 86-577-67354001
Email:teji@teji-valve.com betty@teji-valve.com

TEJI®

API & BS CAST & FORGED BALL VALVES

www.teji-valves.com



TEJI VALVE GROUP CO. LTD.

TEJI®



www.teji-valves.com



TEJI VALVE GROUP CO., LTD



LEADING THE GLOBAL VALVE INDUSTRY

ABOUT TEJI

Founded in 1980,Teji Valve Group has developed into a technology and professional valve manufacturer, which integrated valve R&D, production, sales, services, import and export all in one mode of operation.

The company covers an area of 38,000㎡with two production bases in Zhejiang and Shanghai, currently 380 emp-loyees and 42 of them are senior engineers and technicians.

Equipped with over 300 sets of metal processing& cutting, machining and testing equipments including vertical CNC machining centers, CNC machines, advanced physio chemical NDT, spectral analysis, mechanical property testing, ultrasonic fault detectors, ultrasonic thickness gags, also lifting, transportation equipments.

Main products: Ball valve, Gate valve, Globe valve through conduit slab and expanding butterfly plug. , Check valve, low-temp valve(Ball valve, Gate valve, Globe valve, Check valve etc.)
Widely used: In Metallurgy, Mine, Petrochemical, Chemical, Oil(Gas) transmission pipeline, Power plant, Heating power and Pharmacy etc.
Size: 1/4"~ 48" (DN6~DN1200)
Pressure ratings: CLASS150~CLASS2500(PN2.5~PN420)
Operative temperature: -196℃~980℃ (-320.8℉~1796℉)
Standards applied: API,ASME,ASNI,NACE,CE/EN,DIN,JIS,BS,ISO,TS, GB etc.
Materials available: WCB (A105), LCB(LF2), C5(F5), WC6(F11), WC9(F22), CF8(F304), CF8M(F316), 4A(F51), 5A(F53), 6A(F55), CK3MCUN(F44), Monel, Inconel（625, 825）, Alloy20, HSLA, Duplex Stainless Steel(LDSS), TiZrNiCu etc.

We appreciate every opportunity to be your reliable partner in valve and control technologies. Any enquiry, questions or advices for our products or services, please contact us directly.







TEJI®



www.teji-valves.com



ISO 9001



CE



API 607



API 607



ISO 14001



OHSAS 18001



TS



API 6D

TEJI VALVE GROUP CO., LTD

LEADING THE GLOBAL VALVE INDUSTRY

CERTIFICATE

Pumping Water Pumping Honor

We have inosculated the quality into each step of enterprise management, not a slogan only, the way of quality development , is accumulated step by step, then it can glow up long time, win the world market, we aspired to become the reliable brand of electric appliances.













TEJI VALVE GROUP CO., LTD

We own advanced producing equipments, make sure of completely new managing concept and strong professional technology force to produce high quality products that confirm with international standards.

LEADING THE GLOBAL VALVE INDUSTRY

PRODUCTION EQUIPMENT

Perfect quality originates from advanced manufacturingmethods



TEJI®




1


2


3

www.teji-valves.com



















Quality Control

1.Fire-safe Test
2.Cyogenic Test
3.PT
4.NDE-MT
5.Spectrometer analysis
6.Spectrometer analysis
7.Thickness testing
8.Ultrasonic Cleaning
9.Ultrasonic Flaw Detection
10.Paint Thickness Test
11.Spring Test
12.Material impact testing
13.Metallography


4


5


6


7


8


9


10


11


12


13

TEJI®



Contents



Floating Ball Valve Series 01~10



Top Entry Ball Valve Series 40~47



Trunnion Pipeline Ball Valve Series 11~26



Metal Seated Floating Ball Valve Series 48~57



Double Block And Bleed Valve Series 27~31



Other Valve Series 58~77



Full Welded Ball Valve Series 32~39

Flange 78~83

Selection Of Ball Valve 84~85

Ball Valve Flow Coefficient 86~86

Notes 87~87

LEADING THE GLOBAL VALVE INDUSTRY

TEJI VALVE GROUP CO., LTD

www.teji-valves.com



Floating Ball Valve Series

TEJI®

LEADING THE GLOBAL VALVE INDUSTRY

Structural Features

1.Special Seat Design

The floating ball valve adopts the design of flexible seal ring structure. When the medium pressure is lower, the contact area of seal ring and ball is smaller.So higher sealing ratio is formed at the place where the seal ring and ball contact to ensure reliable sealing. When the medium pressure is higher, the contact area of seal ring and ball becomes bigger along with the elastic deformation of seal ring, so the seal ring can endure higher medium thrust without being damaged.

2.Fireproof Structure Design

In case of fire during the use of valve, the seat ring made of PTFE or other non-metal materials will be decomposed of damaged under high temperature and cause higher leakage. The firepro of seal ring is set between ball and seat so that after the valve seat is burnt, the medium will push the ball rapidly towards the downstream metal seal ring to form the auxiliary metal to metal sealing structure which can effectively control valve leakage. In addition, the middle flange sealing gasket, which can ensure sealing even under high temperature. The fireproof structure design of floating ball valve conforms to requirements in API 607, API 6FA, BS 6755 and other standards.

Fireproof Structure Design of Seat

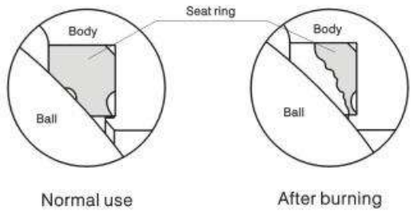

Normal use　　After burning

Fireproof Structure of Middle Flange

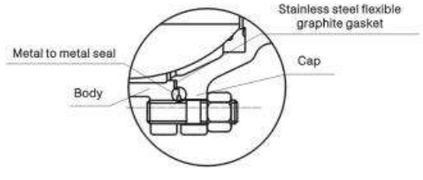

Elastic seat

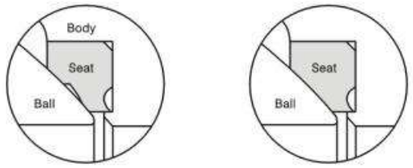

Lower pressure　　High pressure

Fireproof Structure Design of Stem

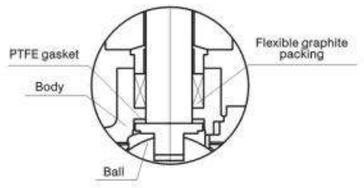

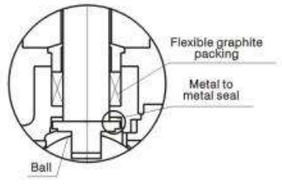

3.Anti-static Structure

The ball valve is provided with the anti-static structure and adopts the static electricity discharge device to directly form a static channel between the balland body through the stem, so as to discharge the static electricity produced due to friction during the opening and closing of ball seat through the pipeline,avoiding fire or explosion that may be cause bu static spark and ensuring system safely.

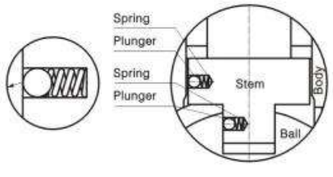

Anti-static structure design of ball valve with DN≥32

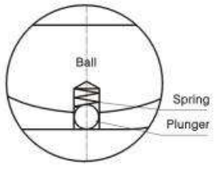

Anti-static structure design of ball valve with DN ≤25

Structural Features

4.Reliable Sealing of Valve Stem

The sten is provided with the shoulder at its bottom so that it will not be blown out by the medium even under the extreme conditions such as abnormal pressure rise inside the valve cavity, failure of gland plate and etc. In addition, to avoid leakage after the stem packing is burnt in case of fire, the thrust bearing is set at the place where the stem shoulder and body contact to form a reverse sealing seat. The sealing force of the reverse seal will increase according to the increase of medium pressure, so as to ensure reliable stem sealing under various pressure , prevent leakage and avoid accident spreading.

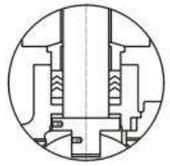

The bottom-mounted stem will not be blown out by medium pressure.

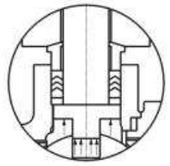

The top-mounter stem may be blown out by medium pressure

The stem adopts V type packing sealing structure, the V type packing can effectively change the pressing force and medium force of the gland into the sealing force of the stem. According to user requirements, the disc spring loaded packing pressing mechanism can be adopted to make the sealing of sten packing more reliable.

Before the packing is pressed

After the packing is pressure

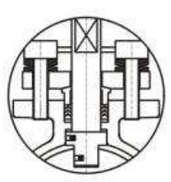

The disc spring loaded packing pressing mechanism is adopted.

5.Lock and Misoperation Prevention

The manual ball valve can be locked by a lock when it is at the full open or full close position. The 90° open and close positioning piece with lock hole isdesigned to avoid valve misoperation caused due to handle operation by non-operators, and it can also prevent valve opening or closing, or other accidents caused bu pipeline vibration or unpredictable factors. It is very effective especially for inflammable and explosive oil, chemical and medical working pipelines or field tubing. The part on the head of the stem that is installed with the handle adopts flat design. Where the valve is opened, the handle is parallel to the pipeline, and closing indications of the valve are guaranteed to have no error.

Lock and Misoperation Prevention Structure

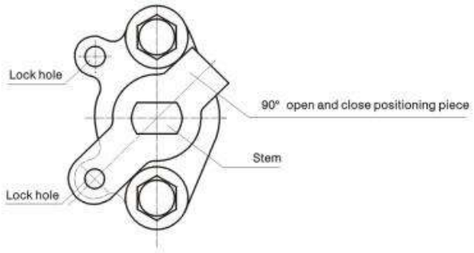

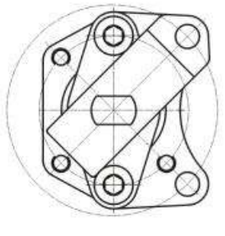

Cast Steel Floating Ball Valve

1	Nut
2	Stud
3	Bonnet
4	Gasket
5	Seat
6	Ball
7	Body
8	Stem Bearing
9	O-Ring
10	Stem
11	Packing
12	Packing bushing
13	Packing gland
14	Stopper
15	Handle
16	Metal pad
17	Screw
18	Anti-static device
19	Socket head cap screw



Part Materials And Main Parameters

Nominal diameter (in)			NPS 1/2~8				
Nominal pressure (MPa)			Class150~Class600				
	No.	Part Name	Material				
			Carbon steel	Stainless steel			
Materials of parts	1	Body	ASTM A216 WCB	ASTM A351 CF8	ASTM A351 CF8M	ASTM A351 CF8	ASTM A351 CF3M
	2	Stud	A197 B7M	A320 B8	A320 B8M	A320 B8	A320 B8M
	3	Seat	PTFE/NYLON/PEEK/PPL				
	4	Ball	ASTM A105 • ENP	ASTM A182 304	ASTM A182 316	ASTM A182 304L	ASTM A182 316L
	5	Anti-fire Gasket	SST+Graphite				
	6	Bonnet	ASTM A216 WCB	ASTM A351 CF8	ASTM A351 CF8M	ASTM A351 CF8	ASTM A351 CF3M
	7	Hexagon nut	A194 2HM	A194-8	A194-8M	A194-8	A194-8M
	8	Anti-static device	Combined parts	Combined parts	Combined parts	Combined parts	Combined parts
	9	Stem	ASTM A182 F6A	ASTM A182 304	ASTM A182 316	ASTM A182 304L	ASTM A 182 316L
	10	Thrust bearing	PTFE				
	11	Sliding bearing	PTFE				
	12	Packing	Graphite				
	13	Packing bushing	ASTM A182 F6A	ASTM A182 F6A	ASTM A182 F6A	ASTM A182 F6A	ASTM A182 F6A
	14	Packing gland	ASTM A216 WCB	ASTM A216 WCB	ASTM A216 WCB	ASTM A216 WCB	ASTM A216 WCB
	15	Socket head cap screw	A197 B7M	A197 B7M	A197 B7M	A197 B7M	A197 B7M
	16	Stopper	A3.Zn	A3.Zn	A3.Zn	A3.Zn	A3.Zn
	17	Retainer ring	65Mn	65Mn	65Mn	65Mn	65Mn
Applicable service conditions		Applicable media	Water, steam, oil, gas, liquefied gas, natural gas, etc.	Nitric acid	Acetic acid	Strong oxidizer	Urea
		Applicable temperature	⩽120℃（PTFE）、⩽80℃（NYLON）、⩽250℃（PEEK）、⩽250℃（PPL）				
Design and manufacturing			API 608				
Face-to-face dimensions			ASME B16.10				
Type of connection			Flange	ASME B16.5		Butt welding	ASME B16.25
Pressure test			API 598				
Transmission mode			Manual, worm and worm gear transmission, pneumatic, electric				

Forged Steel Floating Ball Valve

1	Body
2	Stud
3	Ball
4	Seat
5	Anti-fire Gasket
6	Bonnet
7	Anti-static device
8	Stem
9	Thrust bearing
10	Sliding bearing
11	O ring
12	Anti-fire gasket
13	Seal gland
14	Socket head cap screw
15	Packing
16	Packing bushing
17	Packing gland
18	Socket head cap screw
19	Stopper
20	Retainer ring
21	Hexagon nut



Part Materials And Main Parameters

Nominal diameter (in)			NPS 1/2~8				
Nominal pressure (MPa)			Class150~Class600				
	No.	Part Name	Material				
			Carbon steel	Stainless steel			
Materials of parts	1	Body	ASTM A105	ASTM A182 304	ASTM A182 316	ASTM A182 304L	ASTM A182 316L
	2	Stud	A197 B7M	A320 B8	A320 B8M	A320 B8	A320 B8M
	3	Ball	ASTM A105 • ENP	ASTM A182 304	ASTM A182 316	ASTM A182 304L	ASTM A182 316L
	4	Seat	PTFE/NYLON/PEEK/PPL				
	5	Anti-fire Gasket	SST+Graphite				
	6	Bonnet	ASTM A105	ASTM A182 304	ASTM A182 316	ASTM A182 304L	ASTM A182 316L
	7	Anti-static device	Combined parts	Combined parts	Combined parts	Combined parts	Combined parts
	8	Stem	ASTM A182 F6A	ASTM A182 304	ASTM A182 316	ASTM A182 304L	ASTM A 182 316L
	9	Thrust bearing	PTFE				
	10	Sliding bearing	PTFE				
	11	O ring	VITON				
	12	Anti-fire gasket	Graphite				
	13	Seal gland	ASTM A105 • ENP	ASTM A182 304	ASTM A182 316	ASTM A182 304L	ASTM A182 316L
	14	Socket head cap screw	A197 B7M	A320 B8	A320 B8M	A320 B8	A320 B8M
	15	Packing	Graphite				
	16	Packing bushing	ASTM A182 F6A	ASTM A182 F6A	ASTM A182 F6A	ASTM A182 F6A	ASTM A182 F6A
	17	Packing gland	ASTM A216 WCB	ASTM A216 WCB	ASTM A216 WCB	ASTM A216 WCB	ASTM A216 WCB
	18	Socket head cap screw	A197 B7M	A197 B7M	A197 B7M	A197 B7M	A197 B7M
	19	Stopper	A3.Zn	A3.Zn	A3.Zn	A3.Zn	A3.Zn
	20	Retainer ring	65Mn	65Mn	65Mn	65Mn	65Mn
	21	Hexagon nut	A194 2HM	A194-8	A194-8M	A194-8	A194-8M
Applicable service conditions		Applicable media	Water, steam, oil, gas, liquefied gas, natural gas, etc.	Nitric acid	Acetic acid	Strong oxidizer	Urea
		Applicable temperature	≤120℃（PTFE）、≤80℃（NYLON）、≤250℃（PEEK）、≤250℃（PPL）				
Design and manufacturing			API 608				
Face-to-face dimensions			ASME B16.10				
Type of connection			Flange	ASME B16.5		Butt welding	ASME B16.25
Pressure test			API 598				
Transmission mode			Manual, worm and worm gear transmission, pneumatic, electric				

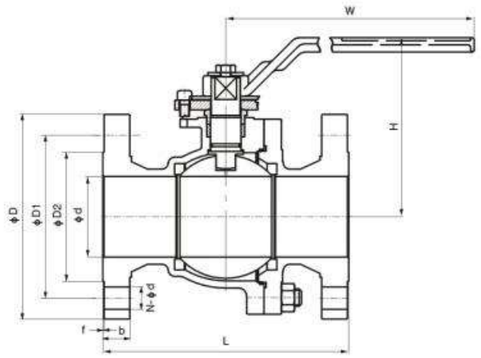

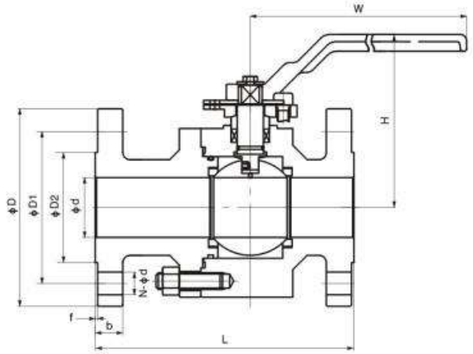

Pressure rating	Nominal Diameter		d	Flanged		Butt welding	Raised face flange						W	Cast steel	Forged steel	Weight (kg)	
Class	NPS	DN		L(RF)	L(RTJ)	L(BW)	D	D1	D2	f	b	N-Φd		H	H	Cast steel	Forged steel
150	1/2"	15	13	108	/	140	90	60.5	35	2	9	4-Φ16	140	80	78	2	△
	3/4"	20	19	117	/	152	100	70	43	2	10	4-Φ16	140	86	82	2.5	△
	1"	25	25	127	/	165	110	79.5	51	2	11	4-Φ16	140	98	95	3.5	△
	1 1/4"	32	32	140	/	178	115	89	64	2	11	4-Φ16	180	106	100	6.5	△
	1 1/2"	40	38	165	/	190	125	98.5	73	2	13	4-Φ16	180	133	128	7.5	△
	2"	50	50	178	191	216	150	120.5	92	2	14.5	4-Φ19	200	138	137	9	△
	3"	80	75	203	216	283	190	152.5	127	2	17.5	4-Φ19	300	175	148	19	△
	4"	100	100	229	241	305	230	190.5	157	2	22.5	8-Φ19	650	235	223	36	△
	6"	150	150	394	406	457	280	241.5	216	2	24	8-Φ22	800	285	278	78	△
	8"	200	201	457	470	521	345	298.5	270	2	27	8-Φ22	1000	342	336	160	△
300	1/2"	15	13	140	/	140	95	66.5	35	2	13	4-Φ16	140	80	78	2.5	△
	3/4"	20	19	152	/	152	115	82.5	43	2	14.5	4-Φ19	140	86	82	3.6	△
	1"	25	25	165	/	165	125	89	51	2	16	4-Φ19	140	98	95	5	△
	1 1/4"	32	32	178	/	178	135	98.5	64	2	17.5	4-Φ19	180	106	100	8.5	△
	1 1/2"	40	38	190	/	190	155	114.5	73	2	19.5	4-Φ22	180	133	128	10	△
	2"	50	50	216	232	216	165	127	92	2	21	8-Φ19	200	138	137	12	△
	3"	80	75	283	298	283	210	168.5	127	2	27	8-Φ22	300	175	148	28	△
	4"	100	100	305	321	305	255	200	157	2	30.5	8-Φ22	650	235	223	46	△
	6"	150	150	403	419	457	320	270	216	2	35	12-Φ22	800	285	278	104	△
	8"	200	201	502	518	521	380	330	270	2	40	12-Φ25	1000	342	336	208	△
600	1/2"	15	13	165	/	165	95	66.5	35	7	14.5	4-Φ16	140	78	68	5	△
	3/4"	20	19	190	/	190	115	82.5	43	7	16	4-Φ19	140	80	76	7	△
	1"	25	25	216	/	216	125	89	51	7	17.5	4-Φ19	180	110	106	9	△
	1 1/4"	32	32	229	/	229	135	98.5	64	7	21	4-Φ19	200	115	110	13	△
	1 1/2"	40	38	241	/	241	155	114.5	73	7	22.5	4-Φ22	250	135	128	17	△
	2"	50	50	292	295	292	165	127	92	7	26	8-Φ19	300	152	140	21	△
	3"	80	75	356	359	356	210	168.5	127	7	32	8-Φ22	650	224	213	43	△
	4"	100	100	432	435	432	275	216	157	7	38.5	8-Φ25	800	248	238	85	△

Please consult the factory:
Note: The weight value in only for flanged valve. Please consult our factory for higher nominal diameter or weight. Any modification to sizes H, H1 and weight will not be notified otherwise.

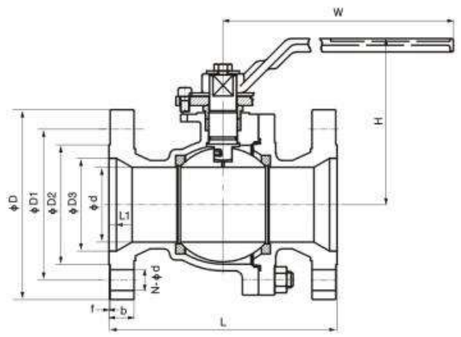

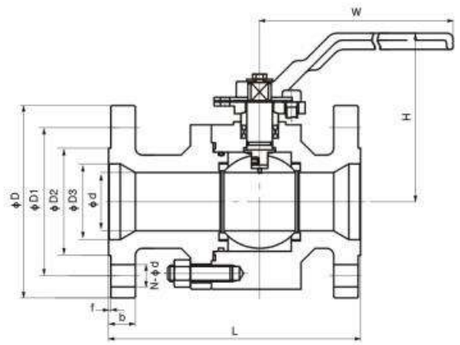

Pressure rating	Nominal Diameter		d	d1	Flanged		Butt welding	Raised face flange						W	Cast steel	Forged steel	Weight (kg)	
Class	NPS	DN			L(RF)	L(RTJ)	L(BW)	D	D1	D2	f	b	N-Φd		H	H	Cast steel	Forged steel
150	3/4"x1/2"	20	13	19	117	/	152	100	70	43	2	10	4-Φ16	140	80	78	△	△
	1"x3/4"	25	19	25	127	/	165	110	79.5	51	2	11	4-Φ16	140	86	82	△	△
	1 1/4"x1"	32	25	32	140	/	178	115	89	64	2	11	4-Φ16	180	98	95	△	△
	1 1/2"x1 1/4"	40	32	38	165	/	190	125	98.5	73	2	13	4-Φ16	180	106	100	△	△
	2"x1 1/2"	50	38	50	178	191	216	150	120.5	92	2	14.5	4-Φ19	200	133	128	8	△
	3"x2"	80	50	75	203	216	283	190	152.5	127	2	17.5	4-Φ19	300	138	137	14	△
	4"x3"	100	75	100	229	241	305	230	190.5	157	2	22.5	8-Φ19	650	175	148	24	△
	6"x4"	150	100	150	267	278	403	280	241.5	216	2	24	8-Φ22	800	235	223	41	△
	8"x6"	200	150	201	292	305	419	345	298.5	270	2	27	8-Φ22	1000	285	278	68	△
300	3/4"x1/2"	20	13	19	152	/	152	115	82.5	43	2	14.5	4-Φ19	140	80	78	△	△
	1"x3/4"	25	19	25	165	/	165	125	89	51	2	16	4-Φ19	140	86	82	△	△
	1 1/4"x1"	32	25	32	178	/	178	135	98.5	64	2	17.5	4-Φ19	180	98	95	△	△
	1 1/2"x1 1/4"	40	32	38	190	/	190	155	114.5	73	2	19.5	4-Φ22	180	106	100	△	△
	2"x1 1/2"	50	38	50	216	232	216	165	127	92	2	21	8-Φ19	200	133	128	11	△
	3"x2"	80	50	75	283	298	283	210	168.5	127	2	27	8-Φ22	300	138	137	21	△
	4"x3"	100	75	100	305	321	305	255	200	157	2	30.5	8-Φ22	650	175	148	36	△
	6"x4"	150	100	150	403	419	457	320	270	216	2	35	12-Φ22	800	235	223	82	△
	8"x6"	200	150	201	419	435	419	380	330	270	2	40	12-Φ25	1000	285	278	126	△
600	3/4"x1/2"	20	13	19	190	/	190	115	82.5	43	7	16	4-Φ19	140	78	68	△	△
	1"x3/4"	25	19	25	216	/	216	125	89	51	7	17.5	4-Φ19	180	80	76	△	△
	1 1/4"x1"	32	25	32	229	/	229	135	98.5	64	7	21	4-Φ19	200	110	106	△	△
	1 1/2"x1 1/4"	40	32	38	241	/	241	155	114.5	73	7	22.5	4-Φ22	250	115	110	△	△
	2"x1 1/2"	50	38	50	292	295	292	165	127	92	7	26	8-Φ19	300	135	128	△	△
	3"x2"	80	50	75	356	359	356	210	168.5	127	7	32	8-Φ22	650	152	140	△	△
	4"x3"	100	75	100	432	435	432	275	216	157	7	38.5	8-Φ25	800	224	213	△	△

Please consult the factory:
Note: The weight value in only for flanged valve. Please consult our factory for higher nominal diameter or weight. Any modification to sizes H, H1 and weight will not be notified otherwise.

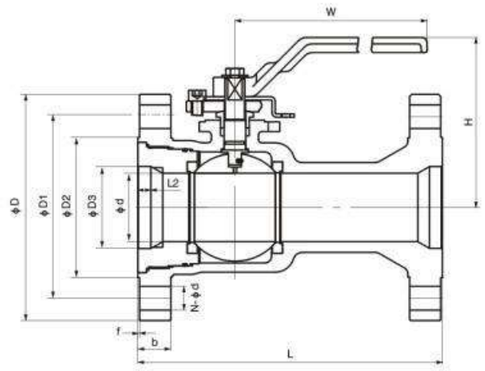

Pressure rating	Nominal Diameter		d	d1	Flanged		Butt welding	Raised face flange						W	Cast steel	Forged steel	Weight (kg)	
Class	NPS	DN			L(RF)	L(RTJ)	L(BW)	D	D1	D2	f	b	N-Φd		H	H	Cast steel	Forged steel
	3/4"x1/2"	20	13	19	117	/	152	100	70	43	2	10	4-Φ16	140	80	78	△	△
	1"x3/4"	25	19	25	127	/	165	110	79.5	51	2	11	4-Φ16	140	86	82	△	△
	1 1/4"x1"	32	25	32	140	/	178	115	89	64	2	11	4-Φ16	180	98	95	△	△
	1 1/2"x1 1/4"	40	32	38	165	/	190	125	98.5	73	2	13	4-Φ16	180	106	100	△	△
150	2"x1 1/2"	50	38	50	178	191	216	150	120.5	92	2	14.5	4-Φ19	200	133	128	8	△
	3"x2"	80	50	75	203	216	283	190	152.5	127	2	17.5	4-Φ19	300	138	137	14	△
	4"x3"	100	75	100	229	241	305	230	190.5	157	2	22.5	8-Φ19	650	175	148	24	△
	6"x4"	150	100	150	267	278	403	280	241.5	216	2	24	8-Φ22	800	235	223	41	△
	8"x6"	200	150	201	292	305	419	345	298.5	270	2	27	8-Φ22	1000	285	278	68	△
	3/4"x1/2"	20	13	19	152	/	152	115	82.5	43	2	14.5	4-Φ19	140	80	78	△	△
	1"x3/4"	25	19	25	165	/	165	125	89	51	2	16	4-Φ19	140	86	82	△	△
	1 1/4"x1"	32	25	32	178	/	178	135	98.5	64	2	17.5	4-Φ19	180	98	95	△	△
	1 1/2"x1 1/4"	40	32	38	190	/	190	155	114.5	73	2	19.5	4-Φ22	180	106	100	△	△
300	2"x1 1/2"	50	38	50	216	232	216	165	127	92	2	21	8-Φ19	200	133	128	11	△
	3"x2"	80	50	75	283	298	283	210	168.5	127	2	27	8-Φ22	300	138	137	21	△
	4"x3"	100	75	100	305	321	305	255	200	157	2	30.5	8-Φ22	650	175	148	36	△
	6"x4"	150	100	150	403	419	457	320	270	216	2	35	12-Φ22	800	235	223	82	△
	8"x6"	200	150	201	419	435	419	380	330	270	2	40	12-Φ25	1000	285	278	126	△
	3/4"x1/2"	20	13	19	190	/	190	115	82.5	43	7	16	4-Φ19	140	78	68	△	△
	1"x3/4"	25	19	25	216	/	216	125	89	51	7	17.5	4-Φ19	180	80	76	△	△
	1 1/4"x1"	32	25	32	229	/	229	135	98.5	64	7	21	4-Φ19	200	110	106	△	△
600	1 1/2"x1 1/4"	40	32	38	241	/	241	155	114.5	73	7	22.5	4-Φ22	250	115	110	△	△
	2"x1 1/2"	50	38	50	292	295	292	165	127	92	7	26	8-Φ19	300	135	128	△	△
	3"x2"	80	50	75	356	359	356	210	168.5	127	7	32	8-Φ22	650	152	140	△	△
	4"x3"	100	75	100	432	435	432	275	216	157	7	38.5	8-Φ25	800	224	213	△	△

Please consult the factory:
Note: The weight value in only for flanged valve. Please consult our factory for higher nominal diameter or weight. Any modification to sizes H, H1 and weight will not be notified otherwise.



TEJI VALVE GROUP CO., LTD

www.teji-valves.com

Trunnion Pipeline Ball Valve Series

TEJI®

LEADING THE GLOBAL VALVE INDUSTRY

USAGE

The trunnion ball valve is used to cut off or connect the media in various pipelines of Class150~Class2500. The valves made of different materials are suitable for various media such as water, steam, oil, liquefied gas, natural gas, coal gas, nitric acid, oxidizer, urea and etc. The driving modes include manual operation, worm and worm gear transmission, pneumatic operation and electric operation. The connection ends can be flange or butt welding.

STRUCTURAL FEATURES

1.Double Block and Bleed (DBB)

When the valve is closed and the middle cavity is emptied through the discharge valve, the upstream and downstream seats will independently block function.Another function of the discharge device is that the valve seat can be checked if there is ant leakage during the test. In addition, the deposits inside the body can be washed and discharge device to reduce damage to the seat by impurities in the medium.

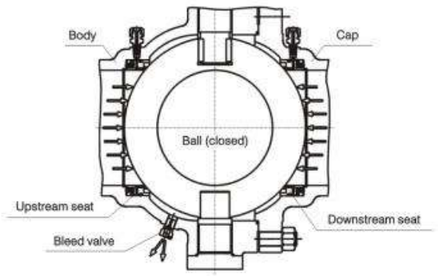

2.Low Operating Torque

The trunnion pipeline ball valve adopts the trunnion ball structure and floating valve seat, so as to achieve lower torque under operating pressure. It uses self-lubricating PTFE and metal sliding bearing to reduce the friction coefficient to the lowest in conjunction with the high intensity and high fineness stem.

3.Emergency Sealing Device

The ball valves with the diameter more than or equal to 6"(DN150) are all designed with sealant injection device on stem and seat. When the seat ring or stem O ring is damaged due to accident, the corresponding sealant can be injected by the sealant injection device to avoid medium leakage on seat ring and stem. If necessary, the auxiliary sealing system can be used for washing and lubricating the seat to maintain its cleanliness.

Sealant Injection Device

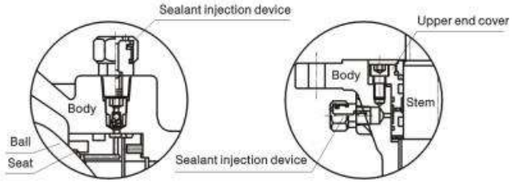

4.Fireproof Structure Design

In care of fire during the use of valve, the seat ring, stem O ring and middle flange O ring made of PTFE, rubber or other non-metal materials will be decomposed or damaged under high temperature. Under pressure of the medium, the ball valve will push the seat reatainer rapidly towards the ball to make the metal seal ring contact the ball and form the auxiliary metal to metal sealing structure, which can effectively control valve leakage. The fireproof structure design of trunnion pipeline ball valve conforms to requirements in API 607, API 6FA, BS 6755 and other standards.

Fireproof Structure of seat

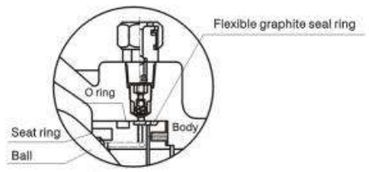

Normal use

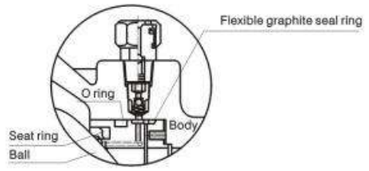

After burning

Fireproof Structure of Middle Flange

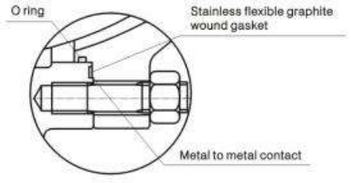

Fireproof Structure Design of Stem

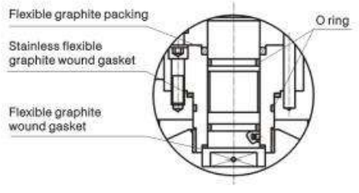

5.Anti-static Structure

The ball valve is provided with the anti-static structure and adopts the static electricity discharge device to directly form a static channel between the ball and body through the stem, so as to discharge the static electricity produced due to friction during the opening and closing of ball and seat through the pipeline, avoiding fire or explosion that may be caused by static spark and ensuring system safety.

6.Reliable seat sealing structure

The seat sealing is realized through two floating seat retainers. They can float axially to block the fluid, including ball sealing and body sealing. The low pressure sealing of valve seat is realized by spring pre-tightening. In addition, the piston effect of valve seat is designed reasonably, which realizes high pressure sealing by the pressure of the medium itself. The following two kinds of ball sealing can be realized.

7.Single Sealing

(automatic Pressure Relief in Middle Cavity of Valve)

Generally, the single sealing structure is used, that is, there is only the upstream sealing. As the independent spring loaded upstream and downstream sealing seats are used, the over-pressure inside valve cavity can overcome the pre-tightening effect of the spring, so as to make the seat release from the ball and realize automatic pressure relief towards the downstream part. The upstream side: When the seat moves axially along the valve, the pressureP exerted on the upstream part (inlet) produces a reverse force on A1, As A2 is higher than A1, A2-A1=B1, the force on B1 will push the seat to the ball andrealize tight sealing of the upstream part.

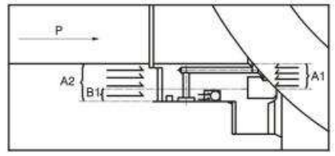

A2 > A1

The downstream side: Once the pressure Pb inside the valve cavity increases, the force exerted on A3 is higher than that on A4. As A3-A4=B2, the pressure differential on B2 will overcome the spring force to make the seat release from the ball and realize pressure relief of valve cavity to the downstream part. Afterwards, the seat and ball will be sealed agin under the spring action.

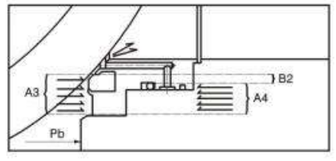

A3 > A4

8.Double Sealing (Double Piston)

The trunnion pipeline ball valve can be designed with the double sealing structure before and after the ball for some special service conditions and user requirements. It has double piston effect. Under normal condition, the valve generally adopts primary sealing. When the primary seat sealing us damaged and causes leakage, the secondary seat can play the function of sealing and enhance the sealing reliability.The seat adopts the combined structure. The primary seal is metal to metal seal. The secondary seal is fluorine rubber O ring that can ensure the ball valve can reach the bubble level sealing. When the pressure differential is very low, the sealing seat will press the ball through the spring action to realize primary sealing. When the pressure differential rises, the sealing force of seat and body will increase accordingly so as to tightly seal the seat and ball and ensure good sealing performance.Primary sealing: Upstream. When the pressure differential is lower or there is no pressure differential, the floating seat will move axially along the valve under the spring action and pish the seat towards the ball to keep tight sealing. When the pipeline pressure P increases, the force exerted in the area A2 ofvalve seat is higher than the force exerted on the area A1, A2-A1=B1. Therefore, the force in B1 will push the seat towards the ball and realize tight sealing of the upstream part.

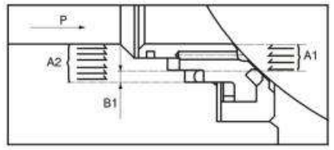

A2 > A1

Secondary sealing: Downstream. When the pressure differential is lower or there is no pressure differential, the floating seat will move axially along the valve under the spring action and push the seat towards the ball to keep tight sealing. When the valve cavity pressure P increases, the force exerted on the area A4 of valve sear in high er than the force exerted on the area A3, A4-A3=B1. Therefore, the force on B1 will push the seat towards the ball and realize tight sealing of the upstream part.

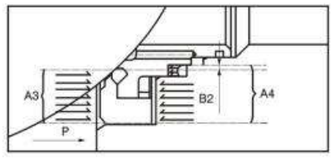

44 > A3

9.Safety Relief Device

As the ball valve is designed with the advanced primary and secondary sealing that has double piston effect, and the middle cavity cannot realize automatic pressure relief, the safety relief valve must to installed on the body in order to prevent the danger of over-pressure damage inside the valve cavity that may occur due to thermal expansion of medium. The connection of the safety relief valve us generally NPT1/2. Another point to be noted us that the medium of the safety relief valve is directly discharged into the atmosphere. In case direct discharging into the atmosphere is not allowed, we suggest that the ball valve with a special structure of automatic pressure relief towards upper stream should be used. Refer to the following for details. Please indicate it in the order if you do not need the safety relief valve or if you would like to use the ball valve with the special structure of automatic pressure relief towards upper stream.

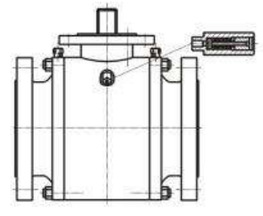

Structural Features

10.Secial Structure of Automatic Pressure Relief Towards Upper Stream

As the ball valve is designed with the advanced primary and secondary sealing that has double piston effect, and the middle cavity cannot realize automatic pressure relief, the ball valve with the special structure is recommended to meet the requirement of automatic pressure relief and ensure no pollution to the environment. In the structure, the upper stream adopts primary sealing and the lower stream adopts primary and secondary sealing. When the ball valve is closed, the pressure in the valve cavity Can realize automatic pressure relief to the upper stream, so as to avoid the danger caused by cavity pressure. When the primary seat is damaged and leaks, the secondary seat can also play the function of sealing. But special attention shall be paid to the flow direction of the ball valve. During the installation. Not the upstream and downstream directions. Refer to the following drawings for sealing principle of the valve with the special structure.

Principle drawing of ball valve upstream and downstream sealing

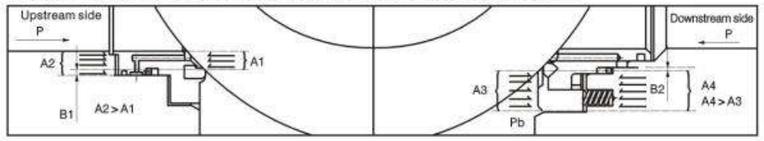

Principle drawing of ball valve cavity pressure relief to the upper stream and of downstream sealing

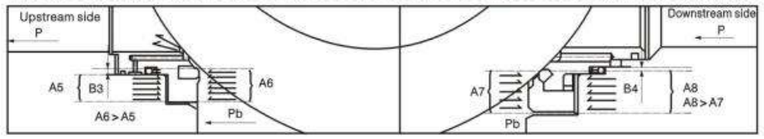

11.Blow-out Proof Stem

The stem adopts the blow-out proof structure. The stem is designed with the footstep at its bottom so that with the positioning of upper end cover and screw, the stem will not be blown out by the medium even in case of abnormal pressure rise in the valve cavity.

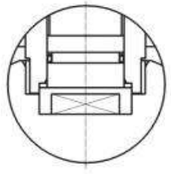

Blow-out proof stem

12.Corrosion Resistance and Sulfide Stress Resistance

Certain corrosion allowance is left for the body will thickness. The carbon steel stem, fixed shaft, ball, seat and seat ring are subjected to chemical nickel plating according to ASTM B733 and B656. In addition, various corrosion resistant materials are available for users to select. According to customer requirements, the valve materials can be selected according to NACE MR 0175/ ISO 15156 or NACE MR 0103, and strict quality control and quality inspection should be carried out during the manufacturing so asto fully meet the requirements in the standards and meet the service conditions in sulfurization environment.

13.Extension Stem

As for the embedded valve, the extension stem can be supplied if ground operation is needed. The extension stem is composed of stem, sealant injection valve, and drainage valve that can be extender to the top for the convenience of operation. Users should indicate the extension stem requirements and length when placing orders.For ball valve driven through electric, pneumatic and pneumatic-hydraulic operations, the extension stem length should be from the centre of pipeline to top flange.



Schematic diagram of extension stem

Cast Trunnion Ball Valve

1	Bonnet
2	Grease valve
3	Damping valve
4	Nut
5	Stud
6	Spring
7	Seat Retainer
8	Nut
9	Stud
10	Lower Cover
11	Gasket
12	O-Ring
13	Thrust Bearing
14	Stem Bearing
15	Body
16	Drain Valve
17	Release Valve
18	Stem Bearing
19	O-Ring
20	Sliding bearing
21	Grease valve
22	Gland
23	Socket head cap screw
24	Stem Bearing
25	Stem
26	O-Ring
27	Pin
28	Packing
29	Socket head cap screw
30	Packing Box
31	Ball
32	Seat
33	O-Ring
34	Gasket
35	Fire Proof Ring
36	O-Ring
37	O-Ring
38	Gasket
39	Gasket



Part Materials and Main Parameters

Nominal diameter (in)			NPS1/2-8				
Nominal Pressure (MPa)			Class150~Class900				
	No.	Part Name	Material				
			Carbon steel	Stainless steel			
Materials of parts	1	Body	ASTM A216 WCB	ASTM A351 CF8	ASTM A351 CF8M	ASTM A351 CF3	ASTM A351 CF3M
	2	Bonnet	ASTM A216 WCB	ASTM A351 CF8	ASTM A351 CF8M	ASTM A351 CF3	ASTM A351 CF3M
	3	Ball	ASTM A105 • ENP	ASTM A182 304	ASTM A182 316	ASTM A182 304L	ASTM A182 316L
	4	Anti-fire paking	Graphite				
	5	Seat	PTFE/NYLON/PEEK/PPL				
	6	Seat support ring	ASTM A105 • ENP	ASTM A182 304	ASTM A182 316	ASTM A182 304L	ASTM A182 316L
	7	O-ring	VITON				
	8	Spring	17-7PH				
	9	O-ring	VITON				
	10	Anti-fire gasket	SST+Graphite				
	11	Hexagon nut	A194 2HM	A194-8	A194-8M	A194-8	A194-8M
	12	Sealant injection valve	Combined parts	Combined parts	Combined parts	Combined parts	Combined parts
	13	Check valve	Combined parts	Combined parts	Combined parts	Combined parts	Combined parts
	14	Air release valve	Combined parts	Combined parts	Combined parts	Combined parts	Combined parts
	15	Anti-static device	Combined parts	Combined parts	Combined parts	Combined parts	Combined parts
	16	Stud	A193 B7M	A320 B8	A320 B8M	A320 B8	A320 B8M
	17	Flat key	ANSI 1045	ANSI 1045	ANSI 1045	ANSI 1045	ANSI 1045
	18	Stem	ASTM A182 F6a	ASTM A182 304	ASTM A182 316	ASTM A182 304L	ASTM A182 316L
	19	Sliding bearing	Metal+PTFE	Metal+PTFE	Metal+PTFE	Metal+PTFE	Metal+PTFE
	20	Thrust bearing	PTFE				
	21	O-ring	VITON				
	22	O-ring	VITON				
	23	Anti-fire gasket	SST+Graphite				
	24	Seal gland	ASTM A105 • ENP	ASTM A182 304	ASTM A182 316	ASTM A182 304L	ASTM A182 316L
	25	Socket head cap screw	A193 B7M	A320 B8	A320 B8M	A320 B8	A320 B8M
	26	Packing	Graphite				
	27	Packing gland	ASTM A182 F6a	ASTM A182 F6a	ASTM A182 F6a	ASTM A182 F6a	ASTM A182 F6a
	28	Lower cover	ASTM A105 • ENP	ASTM A182 304	ASTM A182 316	ASTM A182 304L	ASTM A182 316L
	29	Stud	A193 B7M	A320 B8	A320 B8M	A320 B8	A320 B8M
	30	Hexagon nut	A194 2HM	A194-8	A194-8M	A194-8	A194-8M
	31	Drainage valve	Combined parts	Combined parts	Combined parts	Combined parts	Combined parts
Applicable service conditions		Applicable media	Water, steam, oil, gas,liquefied gas, natural gas, etc.	Nitric acid	Acetic acid	Strong Oxidizer	Urea
		Applicable temperature	120℃(PTFE)、≤80℃(NYLON)、≤250℃(PEEK)、≤250℃ (PPL)				
Design and manufacturing			API 608、API 6D				
Face-to-face dimensions			ASME B16.10、API 6D				
Type of connection			Flange	ASME B16.5/ASME B16.47		Butt welding	ASME B16.25
Pressure test			API 598、API6D				
Transmission mode			Manual, worm and worm gear transmission, pneumatic, electric				

Forged Trunnion Ball Valve

1	Body
2	Ball
3	Stud
4	Anti-fire packing
5	Seat
6	Support ring
7	O-ring
8	Spring
9	O-ring
10	Anti-fire gasket
11	Bonnet
12	Anti-static device
13	Stem
14	Flat key
15	Thrust bearing
16	Sliding bearing
17	O-ring
18	O-ring
19	Anti-fire gasket
20	Seal gland
21	Socket head cap screw
22	Packing
23	Connection plate
24	Socket head cap screw

25	Pin
26	Thrust bearing
27	Lower cover
28	Stud
29	Hexagon nut
30	Drainage valve
31	Air release valve
32	Sealant injection valve
33	Check valve
34	Hexagon nut

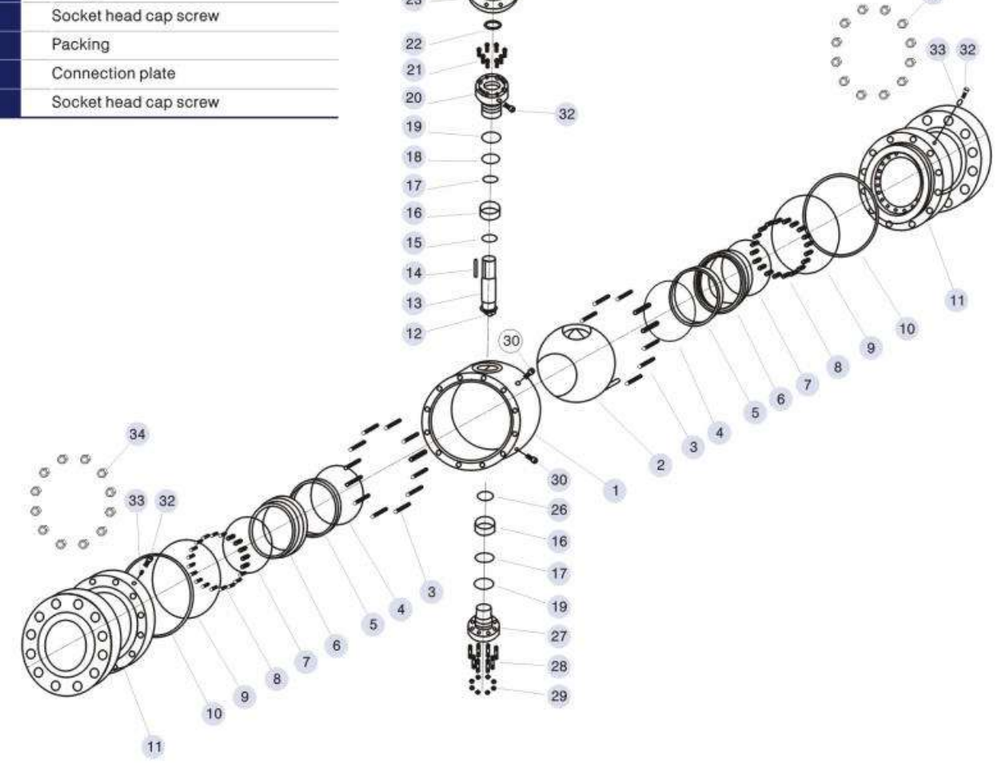

Part Materials and Main Parameters

Nominal diameter (in)			NPS1/2-8				
Nominal Pressure (MPa)			Class150—Class900				
	No.	Part Name	Material				
			Carbon steel	Stainless steel			
Materials of parts	1	Body	ASTM A105	ASTM A182 304	ASTM A182 316	ASTM A182 304L	ASTM A182 316L
	2	Ball	ASTM A105 • ENP	ASTM A182 304	ASTM A182 316	ASTM A182 304L	ASTM A182 316L
	3	Stud	A193 B7M	A320 B8	A320 B8M	A320 B8	A320 B8M
	4	Anti-fire packing	Graphite				
	5	Seat	PTFE/NYLON/PEEK/PPL				
	6	Support ring	ASTM A105 • ENP	ASTM A182 304	ASTM A182 316	ASTM A182 304L	ASTM A182 316L
	7	O-ring	VITON				
	8	Spring	17-7PH				
	9	O-ring	VITON				
	10	Anti-fire gasket	SST+Graphite				
	11	Bonnet	ASTM A105	ASTM A182 304	ASTM A182 316	ASTM A182 304L	ASTM A182 316L
	12	Anti-static device	Combined parts	Combined parts	Combined parts	Combined parts	Combined parts
	13	Stem	ASTM A182 F6a	ASTM A182 304	ASTM A182 316	ASTM A182 304L	ASTM A182 316L
	14	Flat key	ANSI 1045	ANSI 1045	ANSI 1045	ANSI 1045	ANSI 1045
	15	Thrust bearing	PTFE				
	16	Sliding bearing	Metal+PTFE	Metal+PTFE	Metal+PTFE	Metal+PTFE	Metal+PTFE
	17	O-ring	VITON				
	18	O-ring	VITON				
	19	Anti-fire gasket	SST+Graphite				
	20	Seal gland	ASTM A105 • ENP	ASTM A182 304	ASTM A182 316	ASTM A182 304L	ASTM A182 316L
	21	Socket head cap screw	A193 B7M	A320 B8	A320 B8M	A320 B8	A320 B8M
	22	Packing	Graphite				
	23	Connection plate	ASTM A105	ASTM A182 304	ASTM A182 316	ASTM A182 304L	ASTM A182 316L
	24	Socket head cap screw	A193 B7M	A320 B8	A320 B8M	A320 B8	A320 B8M
	25	Pin	ANSI 1035	ANSI 1035	ANSI 1035	ANSI 1035	ANSI 1035
	26	Thrust bearing	PTFE				
	27	Lower cover	ASTM A105 • ENP	ASTM A182 304	ASTM A182 316	ASTM A182 304L	ASTM A182 316L
	28	Stud	A193 B7M	A320 B8	A320 B8M	A320 B8	A320 B8M
	29	Hexagon nut	A194-2HM	A194-8	A194-8M	A194-8	A194-8M
	30	Drainage valve	Combined parts	Combined parts	Combined parts	Combined parts	Combined parts
	31	Air release valve	Combined parts	Combined parts	Combined parts	Combined parts	Combined parts
	32	Sealant injection valve	Combined parts	Combined parts	Combined parts	Combined parts	Combined parts
	33	Check valve	Combined parts	Combined parts	Combined parts	Combined parts	Combined parts
	34	Hexagon nut	A194 2HM	A194-8	A194-8M	A194-8	A194-8M
Applicable service conditions		Applicable media	Water, steam, liquefied gas, oil, gas, natural gas, etc.	Nitric acid	Acetic acid	Strong Oxidizer	Urea
		Applicable temperature	120℃(PTFE)、≤80℃(NYLON)、≤250℃(PEEK)、≤250℃ (PPL)				
Design and manufacturing			API 608、API 6D				
Face-to-face dimensions			ASME B16.10、API 6D				
Type of connection			Flange	ASME B16.5/ASME B16.47		Butt welding	ASME B16.25
Pressure test			API 598、API6D				
Transmission mode			Manual, worm and worm gear transmission, pneumatic, electric				

Forged Trunnion Ball Valve

1	Body
2	Bonnet
3	Ball
4	Stem
5	Seat
6	Seat ring
7	Bearing holder
8	Seal gland
9	Packing
10	Connection plate
11	Pin
12	Pin
13	Flat key
14	Thrust bearing
15	Thrust bearing
16	Thrust bearing
17	Spring

18	O-ring
19	O-ring
20	O-ring
21	O-ring
22	Anti-fire packing
23	Stud
24	Hexagon nut
25	Socket head cap screw
26	Socket head cap screw
27	Sealant injection valve
28	Sealant injection valve
29	Check valve
30	Air release valve
31	Drainage valve
32	O-ring
33	Anti-fire gasket



Part Materials and Main Parameters

Nominal diameter (in)			NPS 2-48				
Nominal Pressure (MPa)			Class150~Class2500				
	No.	Part Name	Material				
			Carbon steel	Stainless steel			
Valve Parts Materials	1	Body	ASTM A105	ASTM A182 304	ASTM A182 316	ASTM A182 304L	ASTM A182 316L
	2	Bonnet	ASTM A105	ASTM A182 304	ASTM A182 316	ASTM A182 304L	ASTM A182 316L
	3	Ball	ASTM A105 · ENP	ASTM A182 304	ASTM A182 316	ASTM A182 304L	ASTM A182 316L
	4	Stem	ASME A182 F6a	ASTM A182 304	ASTM A182 316	ASTM A182 304L	ASTM A182 316L
	5	Seat	PTFE/NYLON/PEEK/PPL				
	6	Seat ring	ASTM A105 · ENP	ASTM A182 304	ASTM A182 316	ASTM A182 304L	ASTM A182 316L
	7	Bearing holder	ASTM A105 · ENP	ASTM A182 304	ASTM A182 316	ASTM A182 304L	ASTM A182 316L
	8	Seal gland	ASTM A105 · ENP	ASTM A182 304	ASTM A182 316	ASTM A182 304L	ASTM A182 316L
	9	Packing	Graphite				
	10	Connection plate	ASTM A105	ASTM A182 304	ASTM A182 316	ASTM A182 304L	ASTM A182 316L
	11	Pin	ANSI 1035	ANSI 1035	ANSI 1035	ANSI 1035	ANSI 1035
	12	Pin	ANSI 1035	ANSI 1035	ANSI 1035	ANSI 1035	ANSI 1035
	13	Flat key	ANSI 1045	ANSI 1045	ANSI 1045	ANSI 1045	ANSI 1045
	14	Thrust bearing	PTFE				
	15	Thrust bearing	PTFE				
	16	Sliding bearing	Metal+PTFE	Metal+PTFE	Metal+PTFE	Metal+PTFE	Metal+PTFE
	17	Spring	17-7PH				
	18	O-ring	VITON				
	19	O-ring	VITON				
	20	O-ring	VITON				
	21	O-ring	VITON				
	22	Anti-fire paking	Graphite				
	23	Stud	A193 B7M	A320 B8	A320 B8M	A320 B8	A320 B8M
	24	Hexagon nut	A194-2HM	A194-8	A194-8M	A194-8	A194-8M
	25	Socket head cap screw	A193 B7M	A320 B8	A320 B8M	A320 B8	A320 B8M
	26	Socket head cap screw	A193 B7M	A320 B8	A320 B8M	A320 B8	A320 B8M
	27	Sealant injection valve	Combined parts	Combined parts	Combined parts	Combined parts	Combined parts
	28	Sealant injection valve	Combined parts	Combined parts	Combined parts	Combined parts	Combined parts
	29	Check valve	Combined parts	Combined parts	Combined parts	Combined parts	Combined parts
	30	Air release valve	Combined parts	Combined parts	Combined parts	Combined parts	Combined parts
	31	Drainage valve	Combined parts	Combined parts	Combined parts	Combined parts	Combined parts
	32	O-ring	Combined parts	Combined parts	Combined parts	Combined parts	Combined parts
	33	Anti-fire gasket	SST+Graphite				
Applicable service conditions		Applicable media	Water, steam, liquefied gas, oil, gas, natural gas, etc.	Nitric acid	Acetic acid	Strong Oxidizer	Urea
		Applicable temperature	120℃(PTFE)、≤80℃(NYLON)、≤250℃(PEEK)、≤250℃ (PPL)				
Design and manufacturing			API 608、API 6D				
Face-to-face dimensions			ASME B16.10、API 6D				
Type of connection			Flange	ASME B16.5/ASME B16.47		Butt welding	ASME B16.25
Pressure test			API 598、API6D				
Transmission mode			Manual, worm and worm gear transmission, pneumatic, electric				

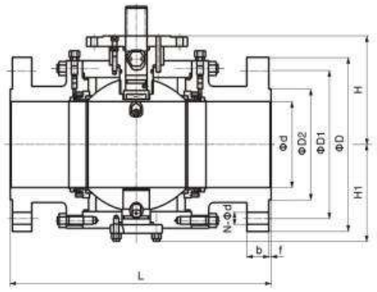

External supporting structure

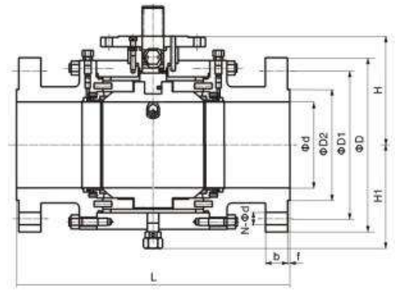

Internal supporting structure

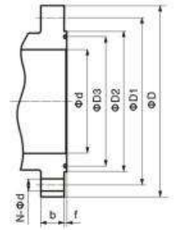

Pressure rating	Nominal Diameter		d	Flange		Butt welding	Raised face flange							General		Support Board		Weight (kg)	
Class	NPS	DN		L(RF)	L(RTJ)	L(BW)	D	D1	D2	D3	f	b	N-Φd	H	H1	H	H1	General	Support Board
150	2"	50	50	178	191	216	150	120.5	92	/	2	14.5	4-Φ19	93	88	/	/	19	/
	3"	80	75	203	216	283	190	152.5	127	/	2	17.5	4-Φ19	118.5	117	/	/	28	/
	4"	100	100	229	241	305	230	190.5	157	/	2	22.5	8-Φ19	143.5	137	/	/	50	/
	6"	150	150	394	406	457	280	241.5	216	/	2	24	8-Φ22	208	178.5	/	/	160	/
	8"	200	201	457	470	521	345	298.5	270	/	2	27	8-Φ22	248	222	248	235	270	284
	10"	250	252	533	546	559	405	362	324	/	2	29	12-Φ25	294	265	294	288	415	436
	12"	300	303	610	622	635	485	432	381	/	2	30.5	12-Φ25	344.5	308.5	345	330	660	693
	14"	350	334	686	699	762	535	476	413	/	2	33.5	12-Φ29	377	334	377	360	890	935
	16"	400	385	762	775	838	595	540	470	/	2	35	16-Φ29	418	375	418	400	1080	1134
	18"	450	436	864	876	914	635	578	533	/	2	38.5	16-Φ32	463	410	463	435	1480	1554
	20"	500	487	914	927	991	700	635	584	/	2	41.5	20-Φ32	502	458	502	484	1970	2069
	24"	600	589	1067	1080	1143	815	749.5	692	/	2	46.5	20-Φ35	586	534	586	568	3000	3150
	26"	650	633	1143	/	1245	870	806.5	749	/	2	68	24-Φ35	626	582	626	594	3612	3793
	28"	700	684	1245	/	1346	927	864	800	/	2	71	28-Φ35	644	605	644	658	4402	4622
	30"	750	735	1295	/	1387	984	914.5	857	/	2	75	28-Φ35	720	672	720	677	5112	5368
	32"	800	779	1372	/	1524	1060	978	914	/	2	81	28-Φ41	742	704	742	746	6667	7000
	36"	900	874	1524	/	1727	1168	1086	1022	/	2	90	32-Φ41	839	796	839	791	8627	9058
	40"	1000	976	1753	/	/	1298	1200	1124	/	2	90	36-Φ41	913.5	866	913.5	863	12313	12929
	42"	1050	1020	1855	/	/	1346	1257	1194	/	2	97	44-Φ41	943	881	943	937	14000	14700
	48"	1200	1166	2134	/	/	1511	1422	1359	/	2	108	36-Φ41	1097	1016	1066	1066	21470	22544
	56"	1400	1360	2489	/	/	1746	1651	1575	/	2	124	48-Φ48	1302	1186	1302	1253	33431	35103
300	2"	50	50	216	232	216	165	127	92	/	2	21	8-Φ19	93	88	/	/	22	/
	3"	80	75	283	298	283	210	168.5	127	/	2	27	8-Φ22	118.5	117	/	/	38	/
	4"	100	100	305	321	305	255	200	157	/	2	30.5	8-Φ22	143.5	137	/	/	60	/
	6"	150	150	403	419	457	320	270	216	/	2	35	12-Φ22	208	178.5	/	/	180	189
	8"	200	201	502	518	521	380	330	270	/	2	40	12-Φ25	248	222	248	235	295	310
	10"	250	252	568	584	559	445	387.5	324	/	2	46.5	16-Φ29	29	265	294	288	450	473
	12"	300	303	648	664	635	520	451	381	/	2	49.5	16-Φ32	344.5	308.5	345	330	700	735
	14"	350	334	762	778	762	585	514.5	413	/	2	52.5	20-Φ32	377	334	377	360	1160	1218
	16"	400	385	838	854	838	650	571.5	470	/	2	56	20-Φ35	423	380	423	345	1340	1407
	18"	450	436	914	930	914	710	628.5	533	/	2	59	24-Φ35	463	410	463	431	1610	1691
	20"	500	487	991	1010	991	775	686	574	/	2	62	24-Φ35	502	458	502	474	2200	2310
	24"	600	589	1143	1165	1143	915	813	592	/	2	68.5	24-Φ41	592	549	592	561	3460	3633
	26"	650	633	1245	/	1245	972	876.5	749	/	2	79	28-Φ45	633	590	633	601	4017	4218
	28"	700	684	1346	/	1346	1035	940	800	/	2	86	28-Φ45	680	737	680	736	4974	5223
	30"	750	735	1397	/	1397	1092	997	857	/	2	92	28-Φ48	730	682	730	684	5681	5965
	32"	800	779	1524	/	1524	1179	1054	914	/	2	98	28-Φ51	765	720	765	716	6837	7179
	36"	900	874	1727	/	1727	1270	1168	1022	/	2	105	32-Φ54	847	804	847	798	8700	9135
	40"	1000	976	1956	/	/	1238	1156	1086	/	2	114	32-Φ45	921	877	921	971	12299	12914
	42"	1050	1020	2083	/	/	1289	1206.5	1137	/	2	119	32-Φ45	936	900	936	890	14379	15098
	48"	1200	1166	2170	/	/	1467	1372	1302	/	2	134	32-Φ51	1093	1052	1093	1040	21482	22556
	56"	1400	1360	2743	/	/	1708	1600	1518	/	2	154	28-Φ60	1263	1216	1263	1203	34066	35769

Note: The weight value is only for flanged valve. Please consult our factory for higher nominal diameter or weight. Any modification to size H, H1, and weight will not be notified otherwise.

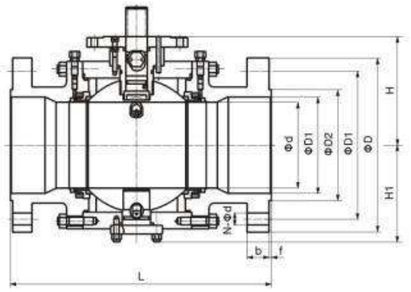

External supporting structure

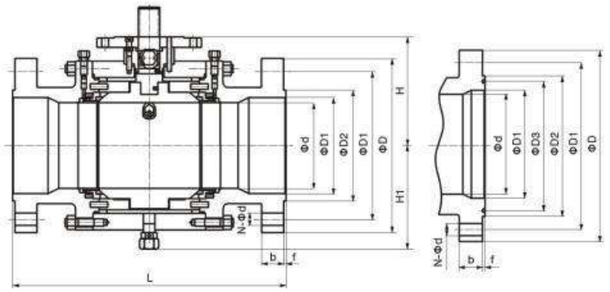

Internal supporting structure

Pressure rating	Nominal Diameter		d	d1	Flange		Butt welding	Raised face flange							General		Support Board		Weight (kg)	
Class	NPS	DN			L(RF)	L(RTJ)	L(BW)	D	D1	D2	D3	f	b	N-Φd	H	H1	H	H1	General	Support Board
150	3"x2"	80	50	75	203	216	283	190	152.5	127	/	2	17.5	4-Φ19	93	88	/	/	28	/
	4"x3"	100	75	100	229	241	305	230	190.5	157	/	2	22.5	8-Φ19	118.5	117	/	/	45	/
	6"x4"	150	100	150	394	406	457	280	241.5	216	/	2	24	8-Φ22	143	137	/	/	95	/
	8"x6"	200	150	201	457	470	521	345	298.5	270	/	2	27	8-Φ22	208	178.5	/	/	170	179
	10"x8"	250	201	252	533	546	559	405	362	324	/	2	29	12-Φ25	248	222	248	235	313	329
	12"x10"	300	252	303	610	622	635	485	432	381	/	2	30.5	12-Φ25	294	265	294	288	470	494
	14"x10"	350	252	334	686	699	762	535	476	413	/	2	33.5	12-Φ29	294	265	294	288	21	580
	14"x12"	350	303	334	686	699	762	535	476	413	/	2	33.5	12-Φ29	344.5	308.5	345	330	760	940
	16"x12"	400	303	385	762	775	838	595	540	470	/	2	35	16-Φ29	344.5	308.5	345	330	834	920
	16"x14"	400	334	385	762	775	838	595	540	470	/	2	35	16-Φ29	377	334	377	360	930	1020
	18"x16"	450	385	436	876	876	914	635	578	533	/	2	38.5	16-Φ32	418	375	418	400	1120	1210
	20"x16"	500	385	487	914	927	991	700	635	584	/	2	41.5	20-Φ32	418	375	418	400	1480	1570
	20"x18"	500	436	487	914	927	991	700	635	584	/	2	41.5	20-Φ32	463	410	463	431	1620	1710
	24"x20"	600	487	589	1067	1080	1143	815	749.5	692	/	2	46.5	20-Φ35	502	458	502	484	2270	1384
	30"x24"	750	589	735	1298	/	1397	984	914.5	857	/	2	75	28-Φ35	586	534	586	568	3730	3917
	36"x30"	900	735	874	1524	/	1727	1168	1086	1022	/	2	90	32-Φ41	720	672	720	677	6730	7077
300	3"x2"	80	50	75	283	298	283	210	168.5	127	/	2	27	8-Φ22	93	88	/	/	42	/
	4"x3"	100	75	100	305	321	305	755	200	157	/	2	30.5	8-Φ22	118.5	117	/	/	62	/
	6"x4"	150	100	150	403	419	457	320	270	216	/	2	35	12-Φ22	143.5	137	/	/	115	120.8
	8"x6"	200	150	201	502	518	521	380	330	270	/	2	40	12-Φ25	208	178.5	/	/	196	206
	10"x8"	250	201	252	568	584	559	445	387.5	324	/	2	46.5	16-Φ29	248	222	248	235	350	368
	12"x10"	300	252	303	648	664	635	520	451	381	/	2	49.5	16-Φ32	294	265	294	288	552	580
	14"x10"	350	252	334	762	778	762	585	514.5	413	/	2	52.5	20-Φ32	294	265	294	288	644	684
	14"x12"	350	303	334	762	778	762	585	514.5	413	/	2	52.5	20-Φ32	344.5	308.5	345	330	780	860
	16"x12"	400	303	385	838	854	838	650	571.5	470	/	2	56	20-Φ35	344.5	308.5	345	330	908	988
	16"x14"	400	334	385	838	854	838	650	571.5	470	/	2	56	20-Φ35	377	334	377	360	1105	1180
	18"x16"	450	385	436	914	930	914	710	628.5	533	/	2	59	24-Φ35	423	380	423	345	1500	1575
	20"x16"	500	385	487	991	1010	991	775	586	584	/	2	62	24-Φ35	423	380	423	345	1600	1700
	20"x18"	500	487	436	991	1010	991	775	686	584	/	2	62	24-Φ35	463	410	463	431	1910	2053
	24"x20"	600	487	589	1143	1165	1143	915	813	692	/	2	68.5	24-Φ41	502	458	502	474	2940	3087
	30"x24"	750	589	735	1397	/	1397	1092	997	857	/	2	92	28-Φ48	592	549	592	561	4430	4652
	36"x30"	900	735	874	1727	/	1727	1270	1168	1022	/	2	105	32-Φ54	730	682	730	681	7520	7896

Note: The weight value is only for flanged valve. Please consult our factory for higher nominal diameter or weight. Any modification to size H, H1, and weight will not be notified otherwise.

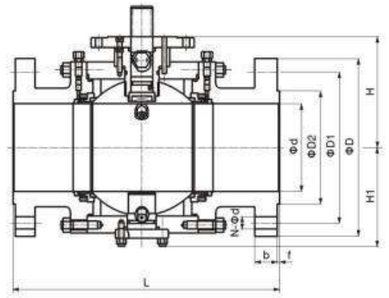

External supporting structure

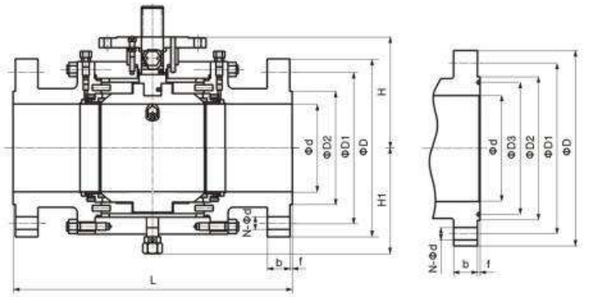

Internal supporting structure

Pressure rating	Nominal Diameter		d	Flange		Butt welding	Raised face flange							General		Support Board		Weight (kg)	
Class	NPS	DN		L(RF)	L(RTJ)	L(BW)	D	D1	D2	D3	f	b	N-Φd	H	H1	H	H1	General	Support Board
600	2"	50	50	292	295	292	165	127	92	/	7	26	8-Φ19	107	91.5	/	/	38	/
	3"	80	75	356	359	356	210	168.5	127	/	7	32	8-Φ22	140	119	/	/	65	/
	4"	100	100	432	435	432	275	216	157	/	7	38.5	8-Φ25	164	150	/	/	118	/
	6"	150	150	559	562	559	355	292	216	/	7	48	12-Φ29	222	192.5	224	208	250	263
	8"	200	201	660	664	660	420	349	270	/	7	56	12-Φ32	271	235	272	248	430	452
	10"	250	252	787	791	787	510	432	324	/	7	64	16-Φ35	317.5	280	318	303	680	714
	12"	300	303	838	841	838	560	489	381	/	7	67	20-Φ35	360	320	355	341	985	1034
	14"	350	334	889	892	889	605	527	413	/	7	70	20-Φ39	390	350	390	370	1287	1351
	16"	400	385	991	994	991	685	603	470	/	7	77	20-Φ41	440	395	400	415	1640	1722
	18"	450	436	1092	1095	1092	745	654	533	/	7	83	20-Φ44	485	439	485	460	2268	2381
	20"	500	487	1194	1200	1194	815	724	584	/	7	89	24-Φ44	533	490	533	510	2830	2972
	24"	600	589	1394	1407	1397	940	838	592	/	7	102	24-Φ51	616	573	616	595	4400	4620
	26"	650	633	1448	/	1448	1016	914.5	749	/	7	108	28-Φ51	643.5	612	643.5	635	5455	5728
	28"	700	684	1549	/	1549	1073	965	800	/	7	112	25-Φ54	665	670	665	692	7610	7991
	30"	750	735	1651	/	1651	1130	1022	857	/	7	114	25-Φ54	753	710	753	690	8420	8841
	32"	800	779	1778	/	1778	1194	1079.5	914	/	7	118	28-Φ54	768	780	768	804	9230	9692
	36"	900	874	2083	/	2083	1314	1194	1022	/	7	124	28-Φ67	861	840	861	865	13000	13650
900	2"	50	50	368	371	368	215	165	124	95 .25	7.92	38.5	8-Φ25	126.5	105	/	/	57	/
	3"	80	75	381	384	381	240	190.5	156	123.83	7.92	38.5	8-Φ25	150	130	/	/	87	/
	4"	100	100	457	460	457	290	235	181	149.23	7.92	45	8-Φ32	172.5	158	/	/	193	/
	6"	150	150	610	613	610	380	317.5	241	211.12	7.92	56	12-Φ32	230	197	235	210	340	357
	8"	200	201	737	740	737	470	393.5	308	269.88	7.92	64	12-Φ39	285	250	290	255	570	598.5
	10"	250	252	838	841	838	545	470	362	323.85	7.92	70	16-Φ39	330	294	330	316	912	957.6
	12"	300	303	965	968	965	610	533.5	419	381	7.92	79.5	20-Φ39	366	334	366	351	1325	1391
	14"	350	322	1029	1038	1029	640	559	467	419.1	11.13	86	20-Φ42	415	368	425	376	1620	1701
	16"	400	373	1130	1140	1130	705	616	524	469.9	11.13	89	20-Φ45	452	408	452	421	1990	2090
	18"	450	423	1219	1232	1219	785	686	594	533.4	12.7	102	20-Φ51	501	461	501	463	2611	2742
	20"	500	471	1321	1334	1321	855	749.5	648	584.2	12.7	108	20-Φ54	544	506	544	505	3880	4074
	24"	600	570	1549	1568	1549	1040	901.5	772	682.15	15.88	140	20-Φ67	657	616	657	608	6296	6611
	26"	650	617	1651	/	1651	1086	952.5	749	/	7	124	20-Φ73	700	635	700	625	7280	8050
	28"	700	665	1753	/	1753	1168	1022	800	/	7	143	20-Φ79	727	685	727	673	9166	9624
	30"	750	712	1880	/	1880	1232	1086	857	/	7	149	20-Φ79	760	722	760	706	11277	11841
	32"	800	760	2032	/	2032	1314	1156	914	/	7	157	20-Φ86	795	755	795	734	12300	12915
	36"	900	855	2286	/	2286	1461	1289	1022	/	7	172	20-Φ92	886	846	886	822	17500	18375

Note: The weight value is only for flanged valve. Please consult our factory for higher nominal diameter or weight. Any modification to size H, H1, and weight will not be notified otherwise.

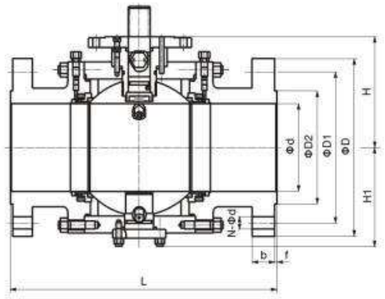

External supporting structure

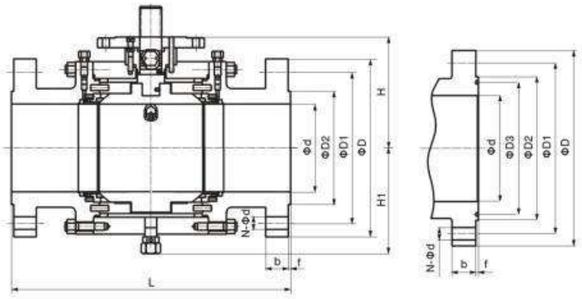

Internal supporting structure

Pressure rating	Nominal Diameter		d	d1	Flange		Butt welding	Raised face flange							General		Support Board		Weight (kg)	
Class	NPS	DN			L(RF)	L(RTJ)	L(BW)	D	D1	D2	D3	f	b	N-Φd	H	H1	H	H1	General	Support Board
600	3"x2"	80	50	75	356	359	356	210	168.5	127	/	7	32	8-Φ22	107	91.5	/	/	44	/
	4"x3"	100	75	100	432	435	432	275	216	157	/	7	38.5	8-Φ25	140	119	/	/	85	/
	6"x4"	150	100	150	559	562	559	355	292	216	/	7	48	12-Φ29	167	150	/	/	169	177
	8"x6"	200	150	201	660	664	660	420	349	270	/	7	56	12-Φ32	222	192.5	224	208	280	294
	10"x8"	250	201	252	787	791	787	510	432	324	/	7	64	16-Φ35	271	235	272	248	520	546
	12"x10"	300	252	303	838	841	838	560	489	381	/	7	67	20-Φ35	317.5	280	318	303	790	830
	14"x10"	350	252	334	889	892	889	605	527	413	/	7	70	20-Φ39	317.5	280	318	303	960	1050
	14"x12"	350	303	334	889	892	889	605	527	413	/	7	70	20-Φ39	360	320	355	341	1070	1180
	16"x12"	400	303	385	991	994	991	685	603	470	/	7	77	20-Φ41	360	320	355	341	1250	1370
	16"x14"	400	334	385	991	994	991	685	603	470	/	7	77	20-Φ41	390	350	390	370	1367	1490
	18"x16"	450	385	436	1092	1095	1092	745	654	533	/	7	83	20-Φ44	440	395	400	415	1840	1932
	20"x16"	500	385	487	1194	1200	1194	815	724	584	/	7	89	24-Φ44	440	395	400	415	2177	2340
	20"x18"	500	436	487	1194	1200	1194	815	724	584	/	7	89	24-Φ44	485	439	485	460	2390	2540
	24"x20"	600	487	589	1397	1407	1397	940	838	692	/	7	102	24-Φ51	533	490	533	510	3560	3738
	30"x24"	750	589	735	1651	/	1651	1130	1022	857	/	7	114	28-Φ54	616	573	616	595	5200	5460
	36"x30"	900	735	874	2083	/	2083	1314	1194	1022	/	7	124	28-Φ67	753	710	753	690	9900	10395
900	3"x2"	80	50	75	381	384	381	240	190.5	156	123.83	7.92	38.5	8-Φ25	126.5	105	/	/	56	/
	4"x3"	100	75	100	457	460	457	290	235	181	149.23	7.92	45	8-Φ32	150	130	/	/	97	/
	6"x4"	150	100	150	610	613	610	380	317.5	241	211.12	7.92	56	12-Φ32	172.5	158	/	/	220	231
	8"x6"	200	150	201	737	740	737	470	393.5	308	269.88	7.92	64	12-Φ39	230	197	235	210	436	458
	10"x8"	250	201	252	838	841	838	545	470	362	323.85	.92	70	16-Φ39	285	250	290	255	650	683
	12"x10"	300	252	303	965	968	965	610	533.5	419	381	7.92	79.5	20-Φ39	330	294	330	316	1050	1103
	14"x10"	350	252	322	1029	1038	1029	640	559	467	419.1	11.13	86	20-Φ42	330	294	330	316	1230	1390
	14"x12"	350	303	322	1029	1038	1029	640	559	467	419.1	11.13	86	20-Φ42	366	334	366	351	1435	1565
	16"x12"	400	303	373	1130	1140	1130	705	616	524	469.9	11.13	89	20-Φ45	366	334	366	351	1700	1820
	16"x14"	400	322	373	1130	1140	1130	705	616	524	469.9	11.13	89	20-Φ45	415	368	415	376	1820	2080
	18"x16"	450	373	423	1219	1232	1219	785	686	594	533.4	12.7	102	20-Φ51	452	408	452	421	2550	2678
	20"x16"	500	373	471	1321	1334	1321	855	749.5	648	584.2	12.7	108	20-Φ54	452	408	452	421	2630	2765
	20"x18"	500	373	471	1321	1334	1321	855	749.5	648	584.2	12.7	108	20-Φ54	501	461	501	463	3630	3900
	24"x20"	600	471	570	1549	1568	1549	1040	901.5	772	692.15	15.88	140	20-Φ67	544	506	544	505	5030	5285
	30"x24"	750	570	712	2880	/	1880	1232	1086	857	/	7	149	20-Φ79	657	616	657	608	8730	9167
	36"x30"	900	712	855	2286	/	2286	1461	1289	1022	/	7	172	20-Φ92	760	722	760	706	15385	16154

Note: The weight value is only for flanged valve. Please consult our factory for higher nominal diameter or weight. Any modification to size H, H1, and weight will not be notified otherwise.

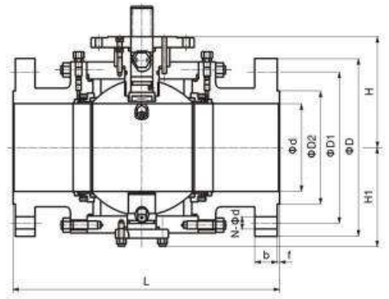

External supporting structure

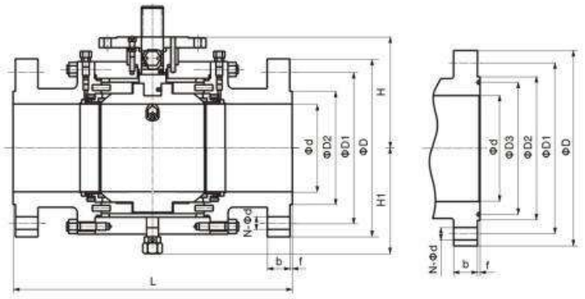

Internal supporting structure

Pressure rating	Nominal Diameter		d	Flange		Butt welding	Raised face flange							General		Support Board		Weight (kg)	
Class	NPS	DN		L(RF)	L(RTJ)	L(BW)	D	D1	D2	D3	f	b	N-Φd	H	H1	H	H1	General	Support Board
1500	2"	50	50	368	371	368	215	165	124	95.25	7.92	38.5	8-Φ25	126.5	105	/	/	57	/
	3"	80	75	470	473	470	265	203.2	168	136.53	7.92	48	8-Φ32	166	149	/	/	168	/
	4"	100	100	546	549	546	310	241.3	194	161.93	7.92	54	8-Φ35	219	178	/	/	230	/
	6"	150	144	705	711	705	395	317.5	248	211.14	9.53	83	12-Φ39	268	227	/	/	685	/
	8"	200	192	832	841	832	485	393.7	318	269.88	11.13	92	12-Φ45	303	267	305	270	993	1043
	10"	250	239	991	1000	991	585	482.6	371	323.85	11.13	108	15-Φ51	358	323	358	336	1781	1870
	12"	300	287	1130	1146	1130	675	571.5	438	381	14.27	124	16-Φ54	414	381	414	395	2280	2394
	14"	350	315	1257	1276	1257	750	635	489	419.1	15.88	134	16-Φ60	471	432	471	441	3000	3150
	16"	400	360	1384	1407	1384	825	704.8	546	469.9	17.48	146.5	16-Φ67	498	453	498	456	3816	4007
	18"	450	406	1537	1559	/	915	774.7	613	533.4	17.48	162	16-Φ73	570	530	570	535	6195	6505
	20"	500	454	1664	1586	/	985	831.8	673	584.2	17.48	178	16-Φ79	611	569	611	561	9075	9529
2500	2"	50	42	451	454	451	235	171.4	133	101.6	7.92	51	8-Φ29	149	123	/	/	140	/
	3"	80	62	578	584	578	305	228.6	168	127	8.53	67	8-Φ35	215	171	/	/	216	/
	4"	100	87	673	683	673	355	273	203	157.18	11.13	76.5	8-Φ42	245	206	/	/	328	/
	6"	150	131	914	927	914	485	368.3	279	228.6	12.7	108	8-Φ54	306	263	306	265	1030	1082
	8"	200	179	1022	1038	1022	550	438.2	340	279.4	14.27	127	12-Φ54	361	330	361	336	1570	1649
	10"	250	223	1270	1292	1270	675	539.8	425	342.9	17.48	166	12-Φ67	426	388	426	394	2550	2578
	12"	300	265	1422	1445	1422	760	619.1	495	406.4	17.48	185	12-Φ74	479	440	479	446	3872	4066

Note: The weight value is only for flanged valve. Please consult our factory for higher nominal diameter or weight. Any modification to size H, H1, and weight will not be notified otherwise.

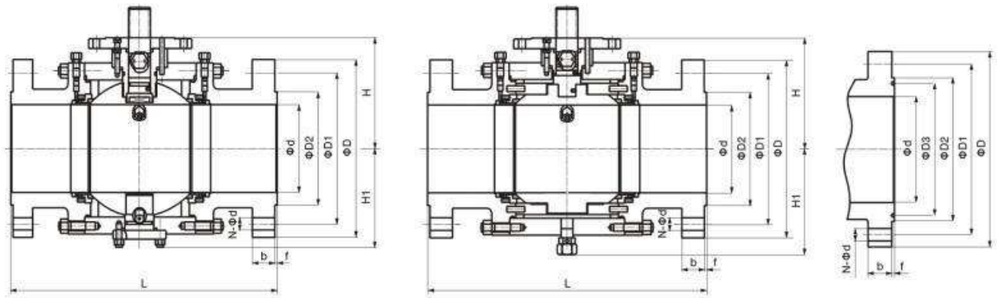

External supporting structure

Internal supporting structure

Pressure rating	Nominal Diameter		d	d1	Flange		Butt welding	Raised face flange							General		Support Board		Weight (kg)	
Class	NPS	DN			L(RF)	L(RTJ)	L(BW)	D	D1	D2	D3	f	b	N-Φd	H	H1	H	H1	General	Support Board
1500	3"x2"	80	50	75	470	473	470	265	203.2	168	136.53	7.92	38.5	8-Φ32	126.5	105	/	/	2	/
	4"x3"	100	74	100	546	549	546	310	241.3	194	161.93	7.92	54	8-Φ35	166	149	/	/	195	205
	6"x4"	150	100	144	705	711	705	395	317.5	248	211.14	9.53	83	12-Φ39	219	178	/	/	270	284
	8"x6"	200	144	192	832	841	832	485	393.7	318	269.88	11.13	92	12-Φ45	268	227	/	/	586	615
	10"x8"	250	192	239	991	1000	991	585	482.6	371	323.85	11.13	108	12-Φ51	303	267	305	270	1010	1061
	12"x10"	300	239	287	1130	1146	1130	675	571.5	438	381	14.27	124	16-Φ54	358	323	358	336	1760	1848
	14"x10"	350	239	315	1257	1276	1257	750	635	489	419.1	15.88	134	16-Φ60	358	323	358	336	2010	2238
	14"x12"	350	287	315	1257	1276	1257	750	635	489	419.1	15.88	134	16-Φ60	414	381	414	395	2680	2840
	16"x12"	400	287	360	1384	1407	1384	825	704.8	546	469.9	17.48	146.5	16-Φ67	414	381	414	395	2860	3180
	16"x14"	400	315	360	1384	1407	1384	825	704.8	546	469.9	17.48	146.5	16-Φ67	471	432	471	441	3530	3850
	18"x16"	450	360	406	1537	1559	/	915	774.7	613	533.4	17.48	162	16-Φ73	498	453	498	456	5030	5282
	20"x16"	500	360	454	1664	1686	/	985	831.8	673	584.2	17.48	178	16-Φ79	498	453	498	355	/	/
	20"x18"	500	406	454	1664	1686	/	951	831.8	673	584.2	17.48	178	16-Φ79	570	530	570	456	5380	5790
3000	3"x2"	80	42	62	578	574	579	305	228.6	168	127	8.53	67	8-Φ35	149	123	/	/	157	165
	4"x3"	100	62	87	673	693	673	355	273	203	157.18	11.13	76.5	8-Φ42	215	171	/	/	260	273
	6"x4"	150	87	131	914	927	914	485	368.3	279	228.6	12.7	108	8-Φ54	245	206	/	/	548	575
	8"x6"	200	131	179	1022	1038	1022	550	438.2	340	279.4	14.27	127	12-Φ54	306	263	306	265	1100	1155
	10"x8"	250	179	223	1270	1292	1270	675	539.8	425	342.9	17.48	166	12-Φ67	361	330	361	336	1890	1985
	12"x10"	300	223	265	1422	1445	1422	760	619.1	495	406.4	17.48	185	16-Φ74	426	388	426	394	2850	2993

Note: The weight value is only for flanged valve. Please consult our factory for higher nominal diameter or weight. Any modification to size H, H1, and weight will not be notified otherwise.



TEJI VALVE GROUP CO., LTD

www.teji-valves.com

Double Block And Bleed Valve Series

TEJI®

LEADING THE GLOBAL VALVE INDUSTRY

1	Body
2	Spring
3	Anti-fire packing
4	O-ring
5	Seat ring
6	Seat
7	Ball
8	Stud
9	Anti-fire gasket
10	O-ring
11	Bonnet
12	Check valve
13	Sealant injection valve
14	Anti-static device
15	Stem
16	Sliding bearing
17	Thrust bearing
18	O-ring
19	O-ring
20	Anti-fire gasket
21	Seal gland

22	Socket head cap screw
23	Pin
24	Packing
25	Packing gland
26	Hexagon bolt
27	Stopper
28	Retainer ring
29	Sealant injection valve
30	Air release valve
31	Check valve
32	Sealant injection valve
33	Drainage valve
34	Drainage valve
35	Thrust bearing
36	Sliding bearing
37	O-ring
38	Anti-fire gasket
39	Lower cover
40	Stud
41	Hexagon nut
42	Hexagon nut



Double block and bleed valves

Nominal diameter (in)			NPS 2-16				
Nominal Pressure (MPa)			Class150~Class2500				
	No.	Part Name	Material				
			Carbon steel	Stainless steel			
Materials of Parts	1	Body	ASTM A105	ASTM A182 304	ASTM A182 316	ASTM A182 304L	ASTM A182 316L
	2	Spring	17-7PH				
	3	Anti-fire packing	Graphite				
	4	O-ring	VITON	VITON	VITON	VITON	VITON
	5	Seat ring	ASTM A105 · ENP	ASTM A182 304	ASTM A182 316	ASTM A182 304L	ASTM A182 316L
	6	Seat	PTFE/NYLON/PEEK/PPL				
	7	Ball	ASTM A105 · ENP	ASTM A182 304	ASTM A182 316	ASTM A182 304L	ASTM A182 316L
	8	Stud	A193 B7M	A320 B8	A320 B8M	A320 B8	A320 B8M
	9	Anti-fire gasket	SST+Graphite				
	10	O-ring	VITON				
	11	Bonnet	ASTM A105	ASTM A182 304	ASTM A182 316	ASTM A182 304L	ASTM A182 316L
	12	Check valve	Combined parts	Combined parts	Combined parts	Combined parts	Combined parts
	13	Sealant injection valve	Combined parts	Combined parts	Combined parts	Combined parts	Combined parts
	14	Anti-static device	Combined parts	Combined parts	Combined parts	Combined parts	Combined parts
	15	Stem	ASTM A182 F6a	ASTM A182 304	ASTM A182 316	ASTM A182 304L	ASTM A182 316L
	16	Sliding bearing	Metal+PTFE	Metal+PTFE	Metal+PTFE	Metal+PTFE	Metal+PTFE
	17	Thrust bearing	PTFE				
	18	O-ring	VITON				
	19	O-ring	VITON				
	20	Anti-fire gasket	SST+Graphite				
	21	Seal gland	ASTM A105 · ENP	ASTM A182 304	ASTM A182 316	ASTM A182 304L	ASTM A182 316L
	22	Socket head cap screw	A193 B7M	A320 B8	A320 B8M	A320 B8	A320 B8M
	23	Pin	ANSI 1035	ANSI 1035	ANSI 1035	ANSI 1035	ANSI 1035
	24	Packing	Graphite	Graphite	Graphite	Graphite	Graphite
	25	Packing gland	ASTM A216 WCB	ASTM A216 WCB	ASTM A216 WCB	ASTM A216 WCB	ASTM A216 WCB
	26	Hexagon bolt	A193 B7M	A320 B8	A320 B8M	A320 B8	A320 B8M
	27	Stopper	A3 · HZn	A3 · HZn	A3 · HZn	A3 · HZn	A3 · HZn
	28	Retainer ring	65Mn	65Mn	65Mn	65Mn	65Mn
	29	Sealant injection valve	Combined parts	Combined parts	Combined parts	Combined parts	Combined parts
	30	Air release valve	Combined parts	Combined parts	Combined parts	Combined parts	Combined parts
	31	Check valve	Combined parts	Combined parts	Combined parts	Combined parts	Combined parts
	32	Sealant injection valve	Combined parts	Combined parts	Combined parts	Combined parts	Combined parts
	33	Drainage valve	Combined parts	Combined parts	Combined parts	Combined parts	Combined parts
	34	Drainage valve	Combined parts	Combined parts	Combined parts	Combined parts	Combined parts
	35	Thrust bearing	PTFE				
	36	Sliding bearing	Metal+PTFE	Metal+PTFE	Metal+PTFE	Metal+PTFE	Metal+PTFE
	37	O-ring	VITON				
	38	Anti-fire gasket	SST+Graphite				
	39	Lower cover	ASTM A105 · ENP	ASTM A182 304	ASTM A182 316	ASTM A182 304L	ASTM A182 316L
	40	Stud	A193 B7M	A320 B8	A320 B8M	A320 B8	A320 B8M
	41	Hexagon nut	A194-2HM	A194-8	A194-8M	A194-8	A194-8M
	42	Hexagon nut	A194-2HM	A194-8	A194-8M	A194-8	A194-8M
Applicable service conditions		Applicable media	Water, steam, oil, gas, liquefied gas, natural gas, etc.	Nitric acid	Acetic acid	Strong Oxidizer	Urea
		Applicable temperature	120℃(PTFE)、≤80℃(NYLON)、≤250℃(PEEK)、≤250℃ (PPL)				
Design and manufacturing			API 608、API 6D				
Face-to-face dimensions			ASME B16.10、API 6D				
Type of connection			Flange	ASME B16.5/ASME B16.47		Butt welding	ASME B16.25
Pressure test			API 598、API6D				
Transmission mode			Manual, worm and worm gear transmission, pneumatic, electric				

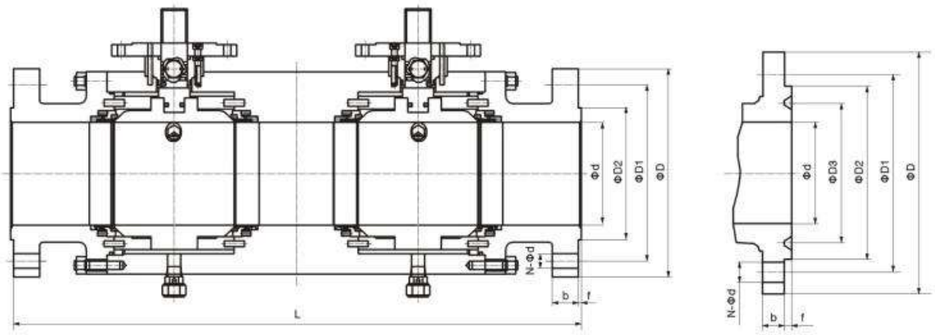

Pressure rating	Nominal Diameter		d	Flange		Butt welding	Raised face flange							H	H1	Weight
Class	NPS	DN		L(RF)	L(RTJ)	L(BW)	D	D1	D2	D3	f	b	N-Φd			(Kg)
150	2"	50	50	356	369	394	150	120.5	92	/	2	14.5	4-Φ19	93	88	△
	3"	80	75	457	470	537	190	152.5	127	/	2	17.5	4-Φ19	118.5	117	△
	4"	100	100	502	514	579	230	190.5	157	/	2	22.5	8-Φ19	143.5	137	△
	6"	150	150	787	799	850	280	241.5	216	/	2	24	8-Φ22	208	178.5	△
	8"	200	201	902	915	966	345	298.5	270	/	2	27	8-Φ22	248	235	△
	10"	250	252	991	1004	1017	405	362	324	/	2	29	12-Φ25	294	288	△
	12"	300	303	1130	1142	1155	485	432	381	/	2	30.5	12-Φ25	345	330	△
	14"	350	334	1245	1258	1321	535	476	413	/	2	33.5	12-Φ29	377	360	△
	16"	400	385	1372	1385	1448	595	540	470	/	2	35	16-Φ29	418	400	△
300	2"	50	50	394	410	394	165	127	92	/	2	21	8-Φ19	93	88	△
	3"	80	75	495	510	495	210	168.5	127	/	2	27	8-Φ22	118.5	117	△
	4"	100	100	568	584	568	255	200	157	/	2	30.5	8-Φ22	143.5	137	△
	6"	150	150	826	842	826	320	270	216	/	2	35	12-Φ22	208	178.5	△
	8"	200	201	991	1007	991	380	330	270	/	2	40	12-Φ25	248	235	△
	10"	250	252	1054	1070	1054	445	387.5	324	/	2	46.5	16-Φ29	294	288	△
	12"	300	303	1194	1210	1194	520	451	381	/	2	49.5	16-Φ32	345	330	△
	14"	350	334	1346	1362	1346	585	514.5	413	/	2	52.5	20-Φ32	377	360	△
	16"	400	385	1473	1489	1473	650	571.5	470	/	2	56	20-Φ35	423	345	△
600	2"	50	50	470	473	470	165	127	92	/	7	26	8-Φ19	107	91.5	△
	3"	80	75	6107	613	610	210	168.5	127	/	7	32	8-Φ22	140	119	△
	4"	100	100	62	765	762	275	216	157	/	7	38.5	8-Φ25	164	150	△
	6"	150	150	978	981	978	355	292	216	/	7	48	12-Φ29	224	208	△
	8"	200	201	1143	1147	1143	420	390	270	/	7	56	12-Φ32	272	248	△
	10"	250	252	1372	1376	1372	510	532	324	/	7	64	16-Φ35	318	303	△
	12"	300	303	1448	1451	1448	560	589	381	/	7	67	20-Φ35	355	341	△
	14"	350	334	1579	1552	1549	605	527	413	/	7	70	20-Φ39	390	370	△
	16"	400	385	1778	1781	1778	685	603	470	/	7	77	20-Φ41	400	415	△

△ Please consult the factory:
Note: The weight value is only for flanged valve. Please consult our factory for higher nominal diameter or weight. Any modification to size Hand ,weight will not be notified otherwise.

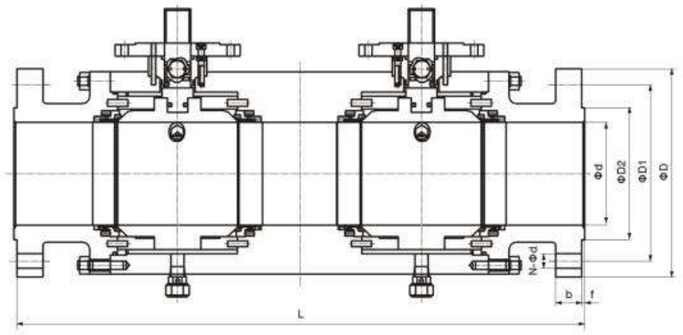

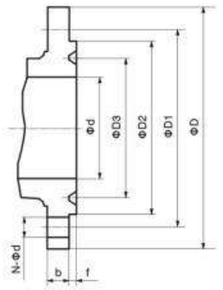

Pressure rating	Nominal Diameter		d	Flange		Butt welding	Raised face flange							H	H1	Weight
Class	NPS	DN		L(RF)	L(RTJ)	L(BW)	D	D1	D2	D3	f	b	N-Φd			(Kg)
900	2"	50	50	610	613	610	215	165	124	95.25	7.92	38.5	8-Φ25	126.5	105	△
	3"	80	75	660	663	660	240	190.5	156	123.83	7.92	38.5	8-Φ25	150	130	△
	4"	100	100	826	829	826	290	235	181	149.23	7.92	45	8-Φ32	172.5	158	△
	6"	150	150	1054	1057	1054	380	317.5	241	211.12	7.92	56	12-Φ32	230	210	△
	8"	200	201	1295	1298	1295	470	393.5	308	269.88	7.92	64	12-Φ39	290	255	△
	10"	250	252	1473	1476	1473	545	470	362	323.85	7.92	70	16-Φ39	330	316	△
	12"	300	303	1651	1654	1651	610	533.5	419	381	7.92	79.5	20-Φ39	366	351	△
	14"	350	322	1880	1889	1880	640	559	467	419.1	11.13	86	20-Φ42	425	376	△
	16"	400	373	1930	1940	1930	705	616	524	469.9	11.13	89	20-Φ45	452	421	△
1500	2"	50	50	610	613	610	215	165	124	85.25	7.92	38.5	8-Φ25	126.5	105	△
	3"	80	75	826	829	826	265	203.2	168	136.53	7.92	48	8-Φ32	166	149	△
	4"	100	100	965	968	965	310	241.3	194	161.93	7.92	54	8-Φ35	219	178	△
	6"	150	144	1232	1238	1232	395	317.5	248	211.14	9.53	83	12-Φ39	268	234	△
	8"	200	192	1448	1457	1448	485	393.7	318	268.88	11.13	92	12-Φ45	305	270	△
	10"	250	239	1778	1787	1778	585	482.6	371	323.85	11.13	108	12-Φ51	358	336	△
	12"	300	287	2083	2099	2083	675	571.5	438	381	14.27	124	16-Φ54	414	395	△
	14"	350	315	2286	2305	2286	750	635	489	419.1	15.88	134	16-Φ50	471	441	△
	16"	400	360	2422	2445	2422	825	704.8	546	469.9	17.48	146.5	16-Φ67	498	456	△
2500	2"	50	42	762	765	762	235	171.4	133	101.6	7.92	51	8-Φ29	149	123	△
	3"	80	62	1029	1153	1029	305	228.6	168	127	9.53	67	8-Φ35	215	141	△
	4"	100	87	1143	1562	1143	355	273	203	157.18	11.13	76.5	8-Φ42	245	206	△
	6"	150	131	1549	1559	1549	485	368.3	278	228.6	12.7	108	8-Φ54	306	265	△
	8"	200	179	1880	1896	1880	550	438.2	340	279.4	14.27	127	12-Φ54	361	336	△

△ Please consult the factory:
Note: The weight value is only for flanged valve. Please consult our factory for higher nominal diameter or weight. Any modification to size Hand ,weight will not be notified otherwise.

TEJI VALVE
GROUP CO., LTD
www.teji-valves.com



Full Welded Ball Valve Series

TEJI®

LEADING THE GLOBAL VALVE INDUSTRY

Structural Features

1、Integral Valve Structure

It is welded by forged steel. The forging materials are subjected to ultrasonic examination according to ASME nondestructive flaw detection requirements. The welding slope in the connection face is subjected to liquid penetration examination.

13、Corrosion Resistance and Sulfide Stress Resistance

Certain corrosion allowance is left for the body wall thickness. The carbon steel stem, fixed shaft, ball, seat and seat ring are subjected to chemical nickel plating according to ASME B733 and B656. In addition, various corrosion resistant materials are available for users to select. According to customer requirements, the valve materials can be selected according to NACE MR 0175/ISO 15156 or NACE MR 0103, and strict quality control and quality inspection should be carried out during the manufacturing so as to fully meet the requirements in the standards and meet the serviceconditions in sulfurization environment.

15、welding of transition pipe

During the manufacturing of the fully welded pipeline ball valve, the transition pipe can be welded for the welding ends valve. The transition pipe can be supplied by users or by our company according to uses requirements. Please indicate the transition pipe diameter and length A when placing orders.

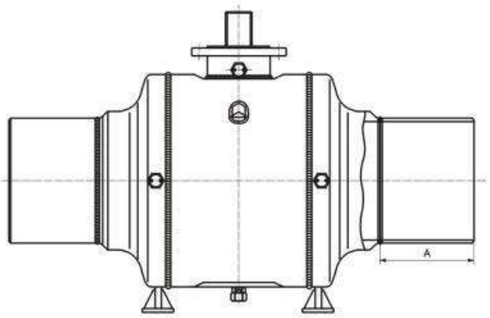



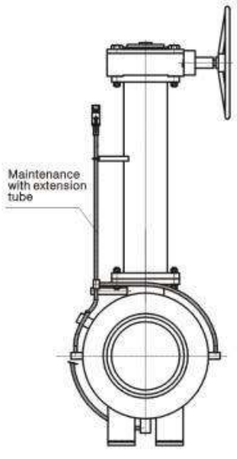

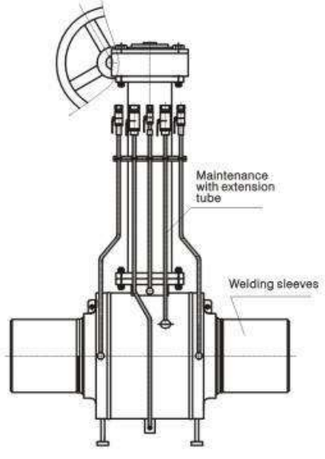

1	Body
2	Anti-fire packing
3	Seat
4	Seat ring
5	O-ring
6	Spring
7	Bonnet
8	Sealant injection valve
9	Check valve
10	Ball
11	Thrust gasket
12	Sliding bearing
13	Pin
14	Bearing holder

15	Seal gland
16	Thrust bearing
17	Stem
18	Flat key
19	Thrust bearing
20	Anti-fire gasket
21	Connection plate
22	Socket head cap screw
23	Packing
24	Packing gland
25	Anti-static device
26	Air release valve
27	Drainage valve



Part Materials and Main Parameters

Nominal diameter (in)			NPS 6~40				
Nominal pressure (MPa)			Class150~Class1500				
	No.	Part Name	Materials				
			Carbon steel	Stainless steel			
Materials of parts	1	Body	ASTM A105	ASTM A182 304	ASTM A182 316	ASTM A182 304L	ASTM A182 316L
	2	Anti-fire packing	Graphite				
	3	Seat	PTFE/NYLON/PEEK/PPL				
	4	Seat ring	ASTM A105 · ENP	ASTM A182 304	ASTM A182 316	ASTM A182 304L	ASTM A182 316L
	5	O-ring	VITON				
	6	Spring	17-7PH				
	7	Bonnet	ASTM A105	ASTM A182 304	ASTM A182 316	ASTM A182 304L	ASTM A182 316L
	8	Sealant injection valve	Combined parts	Combined parts	Combined parts	Combined parts	Combined parts
	9	Check valve	Combined parts	Combined parts	Combined parts	Combined parts	Combined parts
	10	Ball	ASTM A105 · ENP	ASTM A182 304	ASTM A182 316	ASTM A182 304L	ASTM A182 316L
	11	Thrust gasket	PTFE				
	12	Sliding bearing	Metal+PTFE	Metal+PTFE	Metal+PTFE	Metal+PTFE	Metal+PTFE
	13	Pin	ANSI 1035	ANSI 1035	ANSI 1035	ANSI 1035	ANSI 1035
	14	Bearing holder	ASTM A105 · ENP	ASTM A182 304	ASTM A182 316	ASTM A182 304L	ASTM A182 316L
	15	Seal gland	ASTM A105 · ENP	ASTM A182 304	ASTM A182 316	ASTM A182 304L	ASTM A182 316L
	16	Thrust bearing	PTFE				
	17	Stem	ASTM A182 F6a	ASTM A182 304	ASTM A182 316	ASTM A182 304L	ASTM A182 316L
	18	Flat key	ANSI 1045	ANSI 1045	ANSI 1045	ANSI 1045	ANSI 1045
	19	Thrust bearing	PTFE				
	20	Anti-fire gasket	SST+Graphite				
	21	Connection plate	ASTM A105	ASTM A182 304	ASTM A182 316	ASTM A182 304L	ASTM A182 316L
	22	Socket head cap screw	A193 B7M	A320 B8	A320 B8M	A320 B8	A320 B8M
	23	Packing	Graphite	Graphite	Graphite	Graphite	Graphite
	24	Packing Gland	ASTM A182 F6a	ASTM A182 F6a	ASTM A182 F6a	ASTM A182 F6a	ASTM A182 F6a
	25	Anti-static device	Combined parts	Combined parts	Combined parts	Combined parts	Combined parts
	26	Air release valve	Combined parts	Combined parts	Combined parts	Combined parts	Combined parts
	27	Drainage valve	Combined parts	Combined parts	Combined parts	Combined parts	Combined parts
Applicable service conditions		Applicable media	Water, steam, oil, gas, liquefied, petroleum gas, natural gas	Nitric acid	Acetic acid	Strong Oxidizer	Urea
		Applicable temperature	120℃(PTFE)、≤80℃(NYLON)、≤250℃(PEEK)、≤250℃ (PPL)				
Design and manufacturing			API 608、API 6D				
Face-to-face dimensions			ASME B16.10、API 6D、JIS B2002				
Type of connection			Flange	ASME B16.5/ASME B16.47		Butt welding	ASME B16.25
Pressure test			API 598、API6D				
transmission mode			Manual, worm and worm gear transmission, pneumatic, electric				

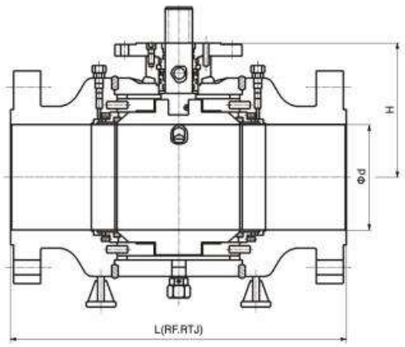

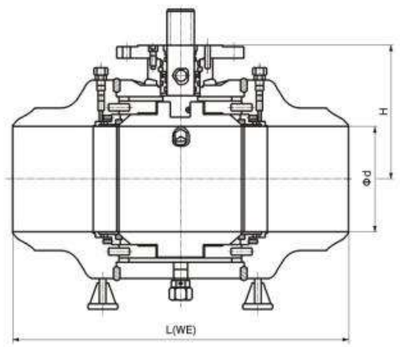

Pressure rating	Nominal Diameter		d	Flanged		Butt welding	H	Weight(kg)	
Class	NPS	DN		L(RF)	L(RTJ)	L(BW)		WE	RF
150	6"	150	150	394	406	457	225	185	220
	8"	200	201	457	470	521	258	250	290
	10"	250	252	533	546	559	310	400	430
	12"	300	303	610	622	635	350	550	620
	14"	350	334	686	699	762	382	820	900
	16"	400	385	762	775	838	421	1100	1220
	18"	450	436	864	876	914	468	1400	1550
	20"	500	487	914	927	991	510	1750	1950
	24"	600	589	1067	1080	1143	592	2800	3050
	26"	650	633	1143	/	1245	635	2900	3250
	28"	700	684	1245	/	1346	675	3400	3700
	30"	750	735	1295	/	1397	723	4800	5300
	32"	800	779	1372	/	1524	751	5500	6000
	36"	900	874	1524	/	1727	858	7550	8370
	40"	1000	976	1753	/	1956	930	10290	11320
300	6"	150	150	403	419	457	225	185	230
	8"	200	201	502	518	521	258	250	300
	10"	250	252	568	584	559	310	400	460
	12"	300	303	648	664	635	350	550	670
	14"	350	334	762	778	762	382	820	1000
	16"	400	385	838	854	838	421	1100	1320
	18"	450	436	914	930	914	468	1400	1650
	20"	500	487	991	1010	991	510	1750	2000
	24"	600	589	1143	1165	1143	592	1800	2550
	26"	650	633	1245	/	1245	635	1900	3300
	28"	700	684	1346	/	1346	675	3400	3750
	30"	750	735	1397	/	1397	723	4800	5500
	32"	800	779	1524	/	1524	751	5500	6500
	36"	900	874	1727	/	1727	858	7980	8800
	40"	1000	976	1956	/	1956	930	10290	11900

Note: The weight value is only for flanged valve. Please consult our factory for higher nominal diameter or weight. Any modification to size H,and weight will not be notified otherwise.

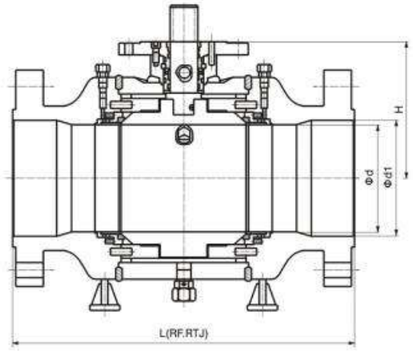

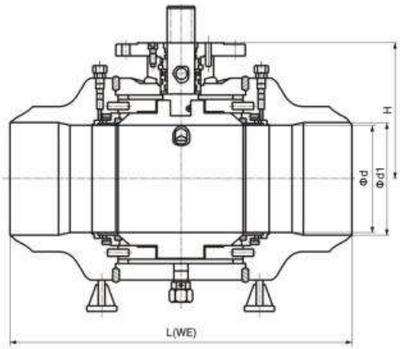

Pressure rating	Nominal Diameter		d	d1	Flanged		Butt welding	H	Weight(kg)	
Class	NPS	DN			L(RF)	L(RTJ)	L(BW)		WE	RF
150	8"x6"	200	150	201	457	470	521	225	△	△
	10"x8"	250	201	252	533	546	559	258	△	△
	12"x10"	300	252	303	610	622	635	310	△	△
	14"x10"	350	252	334	686	699	762	310	△	△
	14"x12"	350	303	334	686	699	762	350	△	△
	16"x12"	400	303	385	762	775	838	350	△	△
	16"x14"	400	334	385	762	775	838	382	△	△
	18"x16"	450	385	436	864	876	914	421	△	△
	20"x16"	500	385	487	914	927	991	421	△	△
	20"x18"	500	436	487	914	927	991	468	△	△
	24"x20"	600	487	589	1067	1080	1143	510	△	△
	30"x24"	750	589	735	1295	/	1397	592	△	△
	36"x30"	900	735	874	1524	/	1727	723	△	△
300	8"x8"	200	150	201	502	518	521	225	△	△
	10"x8"	250	201	252	568	584	559	258	△	△
	12"x10"	300	252	303	648	664	635	310	△	△
	14"x10"	350	252	334	762	778	762	310	△	△
	14"x12"	350	303	334	762	778	762	350	△	△
	16"x12"	400	303	385	838	854	838	350	△	△
	16"x14"	400	334	385	838	854	838	382	△	△
	18"x16"	450	385	436	914	930	914	421	△	△
	20"x16"	500	385	487	991	1010	991	421	△	△
	20"x18"	500	436	487	991	1010	991	468	△	△
	24"x20"	600	487	589	1143	1165	1143	510	△	△
	30"x24"	750	589	735	1397	1422	1397	592	△	△
	36"x30"	900	735	874	1727	1756	1727	723	△	△

△Please consult the factory:
Note: The weight value is only for flanged valve. Please consult our factory for higher nominal diameter or weight. Any modification to size H,and weight will not be notified otherwise.

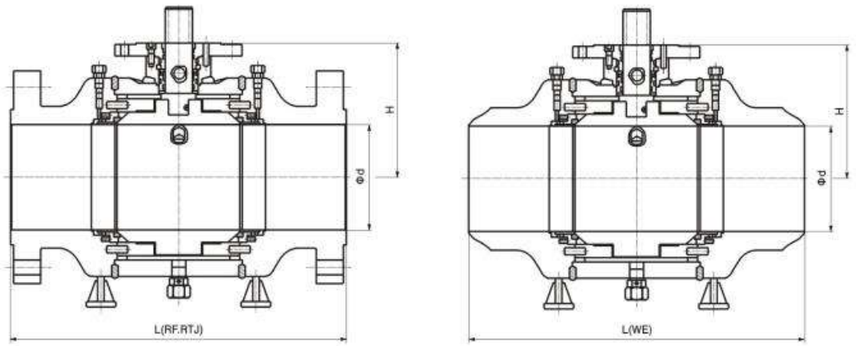

Pressure rating	Nominal Diameter		d	Flanged		Butt welding	H	Weight(kg)	
Class	NPS	DN		L(RF)	L(RTJ)	L(BW)		WE	RF
600	6"	150	150	559	562	559	255	250	330
	8"	200	201	660	664	660	290	340	450
	10"	250	252	787	791	787	320	570	710
	12"	300	303	838	841	838	380	850	1000
	14"	350	334	889	892	889	410	1100	1370
	16"	400	385	991	994	991	435	1350	1650
	18"	450	436	1092	1095	1092	495	2100	2400
	20"	500	487	1194	1200	1194	535	2600	3000
	24"	600	589	1397	1407	1394	642	3700	4300
	26"	650	633	1448	/	1448	665	3900	4500
	28"	700	684	1549	/	1549	704	4200	4900
	30"	750	735	1651	/	1651	745	6000	6900
	32"	800	779	1778	/	1778	785	6800	8000
	36"	900	874	2083	/	2083	875	9570	10850
900	6"	150	150	610	613	610	255	330	430
	8"	200	201	637	740	737	290	400	520
	10"	250	252	838	841	838	320	640	820
	12"	300	303	965	968	965	380	900	1050
	14"	350	322	1029	1038	1029	410	1020	1400
	16"	400	373	1130	1140	1130	435	1350	2050
	18"	450	423	1219	1232	1219	495	2600	3400
	20"	500	471	1321	1334	1321	535	3700	4200
	24"	600	570	1549	1568	1549	642	4400	5400
1500	6"	150	144	705	711	705	255	375	565
	8"	200	192	832	841	832	290	415	505
	10"	250	239	991	1000	991	320	525	640
	12"	300	287	1130	1146	1130	380	780	950
	14"	350	315	1257	1275	1257	410	1145	1380

Note: The weight value is only for flanged valve. Please consult our factory for higher nominal diameter or weight. Any modification to size H,and weight will not be notified otherwise.

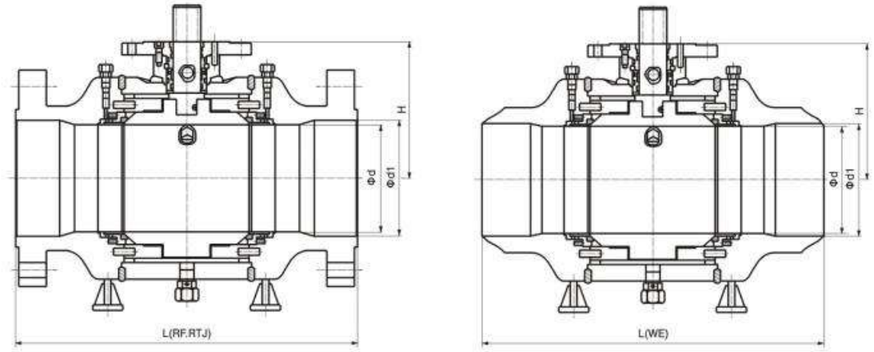

Pressure rating	Nominal Diameter		d	d1	Flanged		Butt welding	H	Weight(kg)	
Class	NPS	DN			L(RF)	L(RTJ)	L(BW)		WE	RF
600	8"x6"	200	150	201	660	664	660	255	△	△
	10"x8"	250	201	252	787	791	787	290	△	△
	12"x10"	300	252	303	838	841	838	320	△	△
	14"x10"	350	252	334	889	892	889	380	△	△
	14"x12"	350	303	334	889	892	889	380	△	△
	16"x12"	400	303	385	991	994	991	380	△	△
	16"x14"	400	334	385	991	994	991	410	△	△
	18"x16"	450	385	436	1092	1095	1092	435	△	△
	20"x16"	500	385	487	1194	1200	1194	435	△	△
	20"x18"	500	436	487	1194	1200	1194	495	△	△
	24"x20"	600	487	589	1397	1407	1397	535	△	△
	30"x24"	750	589	735	1651	/	1651	642	△	△
	36"x30"	900	735	874	2083	/	2083	745	△	△
900	8"x6"	200	150	201	737	740	737	255	△	△
	10x8"	250	201	252	838	841	838	290	△	△
	12"x10"	300	252	303	965	968	965	320	△	△
	14"x10"	350	252	322	1029	1038	1029	320	△	△
	14"x12"	350	303	322	1029	1038	1029	380	△	△
	16"x12"	400	303	373	1130	1140	1130	380	△	△
	16"x14"	400	322	373	1130	1140	1130	410	△	△
	18"x16"	450	373	423	1219	1232	1219	435	△	△
	20"x16"	500	373	471	1321	1334	1321	435	△	△
	20"x18"	500	423	471	1321	1334	1321	495	△	△
	24"x20"	600	471	570	1549	1568	1549	535	△	△
1500	8"x6"	200	144	192	832	841	832	255	△	△
	10"x8"	250	192	239	991	1000	991	290	△	△
	12"x10"	300	239	287	1130	1146	1130	320	△	△
	14"x10"	350	239	315	1257	1276	1257	320	△	△
	14"x12"	350	287	315	1257	1276	1257	380	△	△
	16"x12"	400	287	360	1384	1407	1384	380	△	△

△Please consult the factory;
Note: The weight value is only for flanged valve. Please consult our factory for higher nominal diameter or weight. Any modification to size H,and weight will not be notified otherwise.



TEJI VALVE
GROUP CO., LTD
www.teji-valves.com

Top Entry
Ball Valve
Series

TEJI®

LEADING THE GLOBAL VALVE INDUSTRY

USAGE

The top entry ball valve is mainly used on pipelines and industrial system. It has such advantages as top online maintenance function,small fluid resistance, simple structure, reliable sealing, convenient operation and closing, etc. The driving modes include manual operation. Worm and worm gear transmission, pneumatic operation andelectric operation. The connection ends can be flange or butt welding

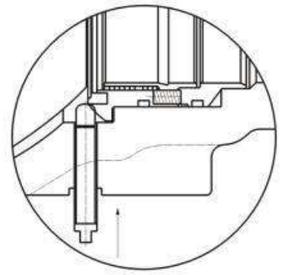

STRUCTURAL FEATURES

1、Intergral structure

The body adopts the integral structure, so as to ensure that is has enough strength and rigidityunder the maximum rated working pressure. The valve trims have been carefully designed and selected to ensure reliability under various service conditions. The sufficient wall thickness and the connection bolts of high strength are very helpful to the maintenance and servicing of valvesand are able to endure pipeline stress.

2、Top Entry Structure

The valve adopts the top entry structure. The most distinctive difference betweenthis kind of valve and others is that the online maintenance function can be realized without the need of removing the valve from the pipeline. The seat adopts the concession type seat structure, and the rear end of the seat retainer is set as oblique angle to prevent impurities accumulated on the seat from influencing the concession of seat.

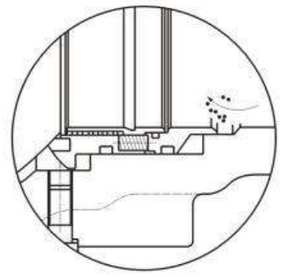





1	Body
2	Ball
3	Seat
4	Seat ring
5	O-ring
6	Spring
7	Anti-fire packing
8	Anti-static device
9	O-ring
10	Sliding bearing
11	Thrust bearing
12	O-ring
13	Anti-fire gasket
14	Bonnet
15	Stud
16	Hexagon nut
17	Packing
18	Packing gland
19	Socket head cap screw
20	Fly key
21	Thrust bearing
22	Anti-fire gasket
23	Lower cover
24	Check valve
25	Sealant injection valve
26	Sealing gasket
27	Socket head cap screw
28	Air release valve
29	Drainage valve



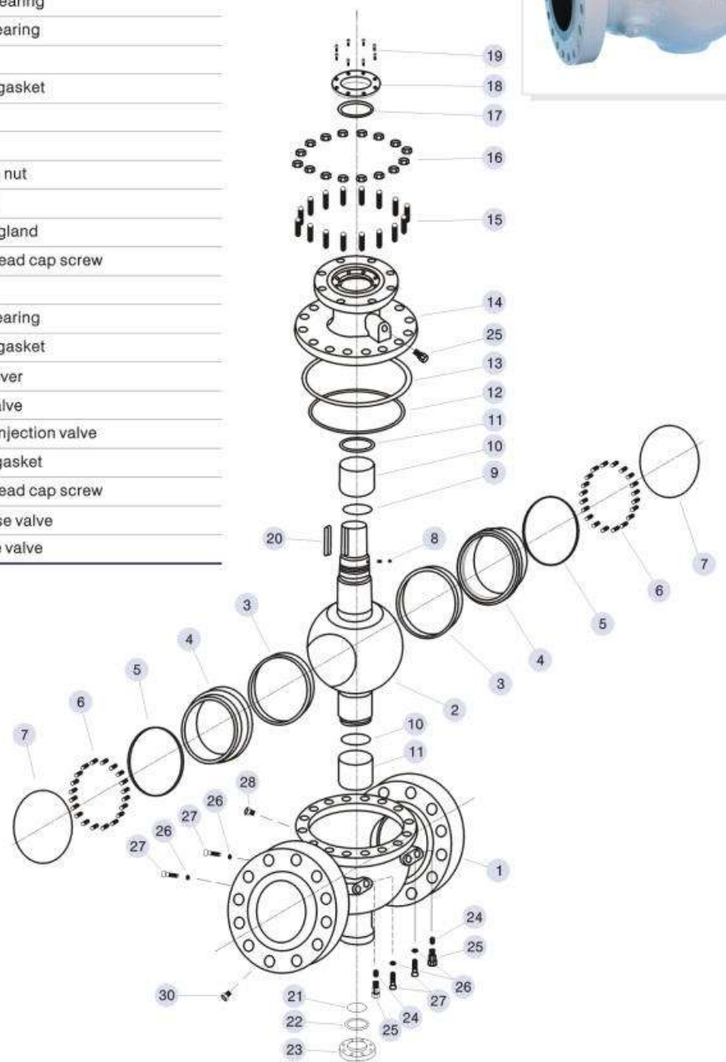

Part Materials and Main Parameters

Nominal diameter (in)			NPS 2-36				
Nominal pressure (MPa)			Class150~Class900				
	No.	Part Name	Material				
			Carbon steel	Stainless steel			
Materials of parts	1	Body	ASTM A216 WCB	ASTM A351 CF8	ASTM A351 CF8M	ASTM A351 CF3	ASTM A351 CF3M
	2	Ball	ASTM A105 · ENP	ASTM A182 304	ASTM A182 316	ASTM A182 304L	ASTM A182 316L
	3	Seat	PTFE/NYLON/PEEK/PPL				
	4	Seat ring	ASTM A105 · ENP	ASTM A182 304	ASTM A182 316	ASTM A182 304L	ASTM A182 316L
	5	O-ring	VITON				
	6	Spring	17-7PH				
	7	Anti-fire packing	Graphite				
	8	Anti-static device	Combined parts	Combined parts	Combined parts	Combined parts	Combined parts
	9	O-ring	VITON				
	10	Sliding bearing	Metal+PTFE	Metal+PTFE	Metal+PTFE	Metal+PTFE	Metal+PTFE
	11	Thrust bearing	PTFE				
	12	O-ring	VITON				
	13	Anti-fire gasket	SST+Graphite				
	14	Bonnet	ASTM A216 WCB	ASTM A351 CF8	ASTM A351 CF8M	ASTM A351 CF3	ASTM A351 CF3M
	15	Stud	A193 B7M	A320 B8	A320 B8M	A320 B8	A320 B8M
	16	Hexagon nut	A194-2HM	A194-8	A194-8M	A194-8	A194-8M
	17	Packing	Graphite				
	18	Packing gland	ASTM A105 · ENP	ASTM A182 304	ASTM A182 316	ASTM A182 304L	ASTM A182 316L
	19	Socket head cap screw	A193 B7M	A320 B8	A320 B8M	A320 B8	A320 B8M
	20	Fly key	ANSI 1045	ANSI 1045	ANSI 1045	ANSI 1045	ANSI 1045
	21	Thrust bearing	PTFE				
	22	Anti-fire gasket	SST+Graphite				
	23	Lower cover	ASTM A105 · ENP	ASTM A182 304	ASTM A182 316	ASTM A182 304L	ASTM A182 316L
	24	Check valve	Combined parts	Combined parts	Combined parts	Combined parts	Combined parts
	25	Sealant injection valve	Combined parts	Combined parts	Combined parts	Combined parts	Combined parts
	26	Sealing gasket	SST+Graphite				
	27	Socket head cap screw	A193 B7M	A320 B8	A320 B8M	A320 B8	A320 B8M
	28	Air release valve	Combined parts	Combined parts	Combined parts	Combined parts	Combined parts
	29	Drainage valve	Combined parts	Combined parts	Combined parts	Combined parts	Combined parts
Applicable service conditions		Applicable media	Water, steam, oil, gas, liquefied gas, natural gas, etc.	Nitric acid	Acetic acid	Strong Oxidizer	Urea
		Applicable temperature	120℃(PTFE)、≤80℃(NYLON)、≤250℃(PEEK)、≤250℃ (PPL)				
Design and manufacturing			API 608、API 6D				
Face-to-face dimensions			ASME B16.10、API 6D 、JIS B2002				
Type of connection			Flange	ASME B16.5/ASME B16.47		Butt welding	ASME B16.25
Pressure test			API 598、API6D				
Transmission mode			Manual, gear, pneumatic, electric				

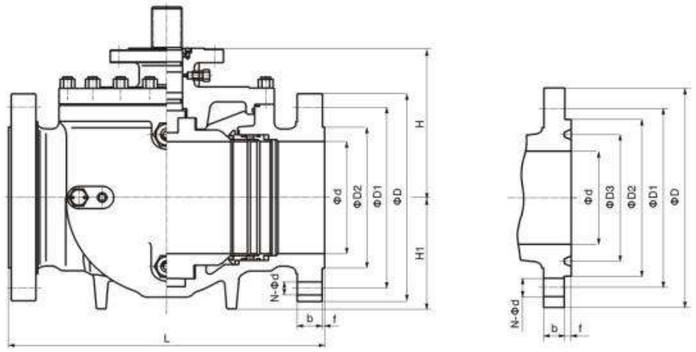

Pressure rating	Nominal Diameter		d	Flange		Butt welding	Flanged							H	H1	Weight
Class	NPS	DN		L(RF)	L(RTJ)	L(BW)	D	D1	D2	D3	f	b	N-Φd			(Kg)
150	2"	50	50	292	295	292	150	120.5	92	/	2	14.5	4-Φ19	130	102	△
	3"	80	75	283	298	283	190	152.5	127	/	2	17.5	4-Φ19	163	150	△
	4"	100	100	432	435	432	230	190.5	157	/	2	22.5	8-Φ19	177	175	△
	6"	150	150	559	562	559	280	241.5	216	/	2	24	8-Φ22	240	231	△
	8"	200	201	660	664	660	345	298.5	270	/	2	27	8-Φ22	266	256	△
	10"	250	252	787	791	787	405	362	324	/	2	29	12-Φ25	324	303.5	△
	12"	300	303	838	841	838	485	432	381	/	2	30.5	12-Φ25	383	310	△
	14"	350	334	889	892	889	535	476	413	/	2	33.5	12-Φ29	390	300	△
	16"	400	385	991	994	991	595	540	470	/	2	35	16-Φ29	435	340	△
	18"	450	436	1092	1095	1092	635	578	533	/	2	38.5	16-Φ32	522	410	△
	20"	500	487	1194	1200	1194	700	635	584	/	2	41.5	20-Φ32	565	445	△
	24"	600	589	1394	1407	1394	815	749.5	692	/	2	46.5	20-Φ35	618	480	△
	26"	650	633	1448	/	1448	870	806.5	749	/	2	68	24-Φ35	660	540	△
	28"	700	684	1549	/	1549	927	864	800	/	2	71	28-Φ35	690	596	△
	30"	750	735	1651	/	1651	984	914.5	857	/	2	75	28-Φ35	770	620	△
	32"	800	779	1778	/	1778	1060	978	914	/	2	81	28-Φ41	838	680	△
	36"	900	874	2083	/	2083	1168	1086	1022	/	2	90	32-Φ41	910	710	△
300	2"	50	50	292	295	292	165	127	92	/	2	21	8-Φ19	130	102	△
	3"	80	75	283	298	283	210	168.5	127	/	2	27	8-Φ22	163	150	△
	4"	100	100	432	435	432	255	200	157	/	2	30.5	8-Φ22	177	175	△
	6"	150	150	559	562	559	320	270	216	/	2	35	12-Φ22	240	231	△
	8"	200	201	660	664	660	380	330	270	/	2	40	12-Φ25	266	276	△
	10"	250	252	787	791	787	445	387.5	324	/	2	46.5	16-Φ29	324	303.5	△
	12"	300	303	939	841	939	520	451	381	/	2	49.5	16-Φ32	383	362	△
	14"	350	334	889	892	889	585	514.5	413	/	2	52.5	20-Φ32	390	300	△
	16"	400	385	991	994	991	650	571.5	470	/	2	56	20-Φ35	440	365	△
	18"	450	436	1092	1095	1092	710	628.5	533	/	2	59	24-Φ35	535	420	△
	20"	500	487	1194	1200	1194	775	686	584	/	2	62	24-Φ35	575	450	△
	24"	600	589	1394	1407	1394	915	813	692	/	2	68.5	24-Φ42	640	490	△
	26"	650	633	1448	/	1448	972	876.5	749	/	2	79	28-Φ45	680	560	△
	28"	700	684	1549	/	1549	1035	940	800	/	2	86	28-Φ45	720	610	△
	30"	750	735	1651	/	1651	1092	997	957	/	2	92	28-Φ48	808	640	△
	32"	800	779	1778	/	1778	1149	1054	914	/	2	98	28-Φ51	860	700	△
	36"	900	874	2083	/	2083	1270	1168	1022	/	2	105	32-Φ54	935	730	△

△ Please consult the factory:
Note: The weight value is only for flanged valve. Please consult our factory for higher nominal diameter or weight. Any modification to size Hand ,weight will not be notified otherwise.

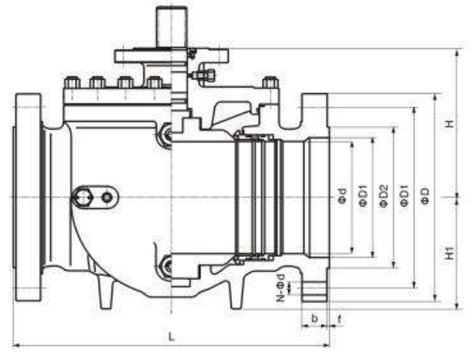

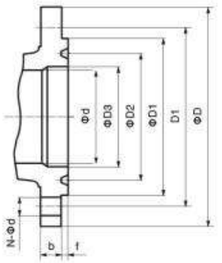

Pressure rating	Nominal Diameter		d	d1	Flange		Butt welding	Flanged							H	H1	Weight
Class	NPS	DN			L(RF)	L(RTJ)	L(BW)	D	D1	D2	D3	f	b	N-Φd			(Kg)
150	3"x2"	80	50	75	283	298	283	190	152.5	127	/	2	17.5	4-Φ19	130	102	△
	4"x3"	100	75	10	432	435	432	230	190.5	157	/	2	22.5	8-Φ19	163	150	△
	6"x4"	150	100	150	559	562	559	280	241.5	216	/	2	24	8-Φ22	177	175	△
	8"x6"	200	150	201	660	664	660	345	298.5	270	/	2	27	8-Φ22	240	231	△
	10"x8"	250	201	252	787	791	787	405	362	324	/	2	29	12-Φ25	266	256	△
	12"x10"	300	252	303	838	841	838	485	432	381	/	2	30.5	12-Φ25	324	303.5	△
	14"x10"	350	252	334	889	892	889	535	476	413	/	2	33.5	12-Φ29	324	303.5	△
	14"x12"	350	303	334	889	892	889	535	476	413	/	2	33.5	12-Φ29	383	310	△
	16"x12"	400	303	385	991	994	991	595	540	470	/	2	35	16-Φ29	383	310	△
	16"x14"	400	334	385	991	994	991	595	540	470	/	2	35	16-Φ29	390	300	△
	18"x16"	450	385	436	1092	1095	1092	635	578	533	/	2	38.5	16-Φ32	435	340	△
	20"x16"	500	385	487	1194	1200	1194	700	635	584	/	2	41.5	20-Φ32	435	340	△
	20"x18"	500	436	487	1194	1200	1194	700	635	584	/	2	41.5	20-Φ32	522	410	△
	24"x20"	600	487	589	1397	1407	1397	815	749.5	692	/	2	46.5	20-Φ35	565	445	△
	30"x24"	750	589	735	1651	/	1651	984	914.5	847	/	2	75	28-Φ35	618	480	△
	36"x30"	900	735	874	2083	/	2083	1168	1086	1022	/	2	90	32-Φ41	770	620	△
300	3"x2"	80	50	75	283	298	283	210	168.5	127	/	2	27	8-Φ22	130	102	△
	4"x3"	100	75	100	432	435	432	255	200	157	/	2	30.5	8-Φ22	163	150	△
	6"x4"	150	100	150	559	562	559	320	270	216	/	2	35	12-Φ22	177	175	△
	8"x6"	200	150	201	660	664	660	380	330	270	/	2	40	12-Φ25	240	231	△
	10"x8"	250	201	252	787	791	787	445	387.5	324	/	2	46.5	16-Φ29	266	276	△
	12"x10"	300	252	303	838	841	838	520	451	381	/	2	49.5	16-Φ32	324	303.5	△
	14"x10"	350	252	334	889	892	889	585	514.5	413	/	2	52.5	20-Φ32	324	303.5	△
	14"x12"	350	303	334	889	892	889	585	514.5	413	/	2	52.5	20-Φ32	383	362	△
	16"x12"	400	303	385	991	994	991	650	571.5	470	/	2	56	20-Φ32	383	362	△
	16"x14"	400	334	385	991	994	991	650	571.5	470	/	2	56	20-Φ35	390	300	△
	18"x16"	450	385	436	1092	1095	1092	710	628.5	533	/	2	59	24-Φ35	440	365	△
	20"x16"	500	385	487	1194	1200	1194	775	686	584	/	2	62	24-Φ35	440	365	△
	20"x18"	500	436	487	1194	1200	1194	775	686	584	/	2	62	24-Φ35	535	420	△
	24"x20"	600	487	589	1397	1407	1397	915	813	692	/	2	68.5	24-Φ41	575	450	△
	30"x24"	750	589	735	1651	/	1651	1092	997	847	/	2	92	28-Φ48	640	490	△
	36"x30"	900	735	874	2083	/	2083	1270	1168	1022	/	2	105	32-Φ54	808	640	△

△ Please consult the factory:
Note: The weight value is only for flanged valve. Please consult our factory for higher nominal diameter or weight. Any modification to size Hand ,weight will not be notified otherwise.

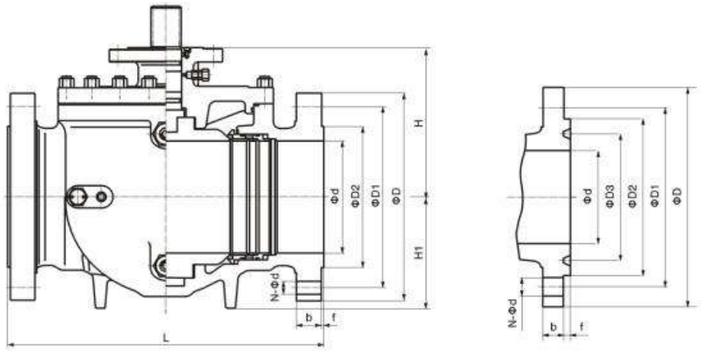

Pressure rating	Nominal Diameter		d	Flange		Butt welding	Flanged							H	H1	Weight
Class	NPS	DN		L(RF)	L(RTJ)	L(BW)	D	D1	D2	D3	f	b	N-Φd			(Kg)
600	2"	50	50	292	295	292	165	127	92	/	7	26	8-Φ19	142	110	△
	3"	80	75	356	359	356	210	168.5	127	/	7	32	8-Φ22	188	165	△
	4"	100	100	432	435	432	275	216	17	/	7	38.5	8-Φ25	205	193	△
	6"	150	150	559	562	559	355	292	216	/	7	48	12-Φ29	255	242	△
	8"	200	201	660	664	660	420	349	270	/	7	56	12-Φ32	282	269	△
	10"	250	252	787	791	787	510	432	324	/	7	64	16-Φ35	369	339	△
	12"	300	303	838	841	838	560	489	381	/	7	67	20-Φ35	402	300	△
	14"	350	334	889	892	889	605	527	413	/	7	70	20-Φ39	410	320	△
	16"	400	385	991	994	991	685	603	470	/	7	77	20-Φ41	467	360	△
	18"	450	436	1092	1095	1092	745	654	533	/	7	83	20-Φ44	560	430	△
	20"	500	487	119	1200	119	815	724	584	/	7	89	24-Φ44	633	490	△
	24"	600	589	1397	1407	1397	940	838	692	/	7	102	24-Φ51	692	536	△
900	2"	50	50	368	371	368	215	165	124	95.25	7.92	38.5	8-Φ25	160	112	△
	3"	80	75	381	384	381	240	190.5	156	123.83	7.92	38.5	8-Φ25	213	168	△
	4"	100	100	457	460	457	290	235	181	149.23	7.92	45	8-Φ32	232	197.5	△
	6"	150	150	610	613	610	380	317.5	241	211.12	7.92	56	12-Φ32	289	258	△
	8"	200	201	737	740	737	470	393.5	308	269.88	7.92	64	12-Φ39	319	294	△
	10"	250	252	838	841	838	545	470	362	323.85	7.92	70	16-Φ39	407	372	△
	12"	300	303	965	968	965	610	533.5	419	381	7.92	79.5	20-Φ39	443	329	△
	14"	350	322	1029	1038	1029	640	559	467	419.1	11.13	86	20-Φ42	467	345	△
	16"	400	373	1130	1140	1130	705	616	524	469.9	11.13	89	20-Φ45	527	388	△
	18"	450	423	1219	1232	1219	785	686	594	533.4	12.7	102	20-Φ51	632	463	△
	20"	500	471	1321	1334	1321	855	749.5	648	584.2	12.7	108	20-Φ54	715	537	△
	24"	600	570	1549	1568	1549	1040	901.5	772	692.15	15.88	140	20-Φ67	782	573	△

△ Please consult the factory:
Note: The weight value is only for flanged valve. Please consult our factory for higher nominal diameter or weight. Any modification to size Hand ,weight will not be notified otherwise.

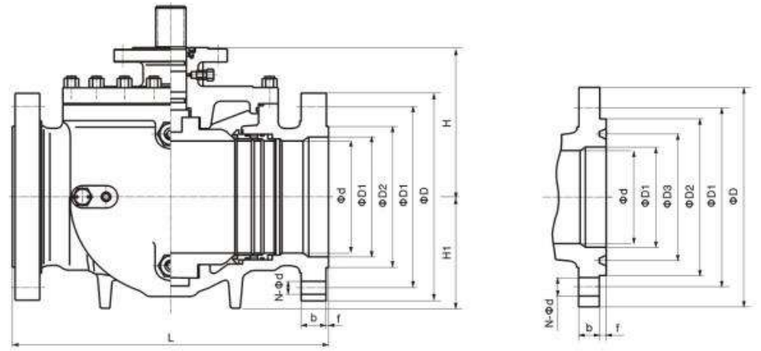

Pressure rating	Nominal Diameter		d	d1	Flange		Butt welding	Flanged							H	H1	Weight
Class	NPS	DN			L(RF)	L(RTJ)	L(BW)	D	D1	D2	D3	f	b	N-Φd			(Kg)
600	3"x2"	80	50	75	356	359	356	210	168.5	127	/	7	32	8-Φ22	142	110	△
	4"x3"	100	75	100	432	435	432	275	216	157	/	7	38.5	8-Φ25	188	165	△
	6"x4"	150	100	150	559	562	559	355	292	216	/	7	48	12-Φ29	205	193	△
	8"x6"	200	150	201	660	664	660	420	349	270	/	7	56	12-Φ32	255	242	△
	10"x8"	250	201	252	787	791	787	510	432	324	/	7	64	16-Φ35	285	268	△
	12"x10"	300	252	303	838	841	838	560	489	381	/	7	67	20-Φ35	369	339	△
	14"x10"	350	252	334	889	892	889	605	527	413	/	7	70	20-Φ39	369	339	△
	14"x12"	350	303	334	889	892	889	605	527	413	/	7	70	20-Φ39	402	300	△
	16"x12"	400	303	385	991	994	991	685	603	470	/	7	77	20-Φ41	402	300	△
	16"x14"	400	334	385	991	994	991	685	603	470	/	7	77	20-Φ41	410	320	△
	18"x16"	450	385	436	1092	1095	1092	745	645	533	/	7	83	20-Φ44	467	360	△
	20"x16"	500	385	487	1194	1200	1194	815	724	584	/	7	89	24-Φ44	467	360	△
	20"x18"	500	436	487	1194	1200	1194	815	724	584	/	7	89	24-Φ44	560	430	△
	24"x20"	600	487	589	1397	1407	1397	940	838	692	/	7	102	24-Φ51	633	490	△
900	3"x2"	80	50	75	381	384	381	240	190.5	156	123.83	7.92	38.5	8-Φ25	160	112	△
	4"x3"	100	75	100	457	460	457	290	235	181	149.23	7.92	45	8-Φ25	213	168	△
	6"x4"	150	100	150	610	613	610	380	317.5	241	211.12	7.92	56	12-Φ32	232	197.5	△
	8"x6"	200	150	201	737	740	737	470	393.5	308	269.88	7.92	64	12-Φ39	289	258	△
	10"x8"	250	201	252	838	841	838	545	470	362	323.85	7.92	70	16-Φ39	319	294	△
	12"x10"	300	252	303	965	968	965	610	533.5	419	381	7.92	79.5	20-Φ39	407	372	△
	14"x10"	350	252	322	1029	1038	1029	640	559	467	419.1	11.13	86	20-Φ42	107	372	△
	14"x12"	350	303	334	1029	1038	1029	640	559	467	419.1	11.13	86	20-Φ42	443	329	△
	16"x12"	400	303	373	1130	1140	1130	705	616	524	469.9	11.13	89	20-Φ45	443	329	△
	16"x14"	400	334	385	1130	1140	1130	705	616	524	469.9	11.13	89	20-Φ45	467	345	△
	18"x16"	450	373	423	1219	1232	1219	785	686	594	533.4	12.7	102	20-Φ51	527	388	△
	20"x16"	500	373	471	1321	1334	1321	855	749.5	648	584.2	12.7	108	20-Φ54	527	388	△
	20"x18"	500	423	471	1321	1334	1321	855	749.5	648	584.2	12.7	108	20-Φ54	632	463	△
	24"x20"	600	471	570	1549	1568	1549	1040	901.5	772	692.2	15.88	140	20-Φ67	715	527	△

△ Please consult the factory:
Note: The weight value is only for flanged valve. Please consult our factory for higher nominal diameter or weight. Any modification to size Hand ,weight will not be notified otherwise.

TEJI VALVE
GROUP CO., LTD
www.teji-valves.com



Metal Seated Floating Ball Valve Series

TEJI®

LEADING THE GLOBAL VALVE INDUSTRY

Summary

With such features as small fluid resistance, smooth flow channel, rapid opening and closing, and easy automatic control, the ball valve has been widely used. But the seat of regular ball valves is generally made of PTFE and other nonmetal material. Limited by seat seal materials, the regular valves cannot bu used under the service condition of high temperature. Therefore, the use of regular ball valves is limited to a certain degree. The series of new style practical metal seated ball valve problem, and have been widely applied in petroleum, chemical industry, electric power, metallurgy, light industry and etc.

Usage

The metal seated ball valve is used to cut off or connect the media in various pipelines. It is suitable for severe service conditions containing solid granules,slurry, coal powder, cinder and etc.

Structural Features

1.Advanced Ball and Seat Hardening Technology

The ball and seat of the metal seated ball valve absolutely adopts the sealing mode of metal to metal. According to different service conditions and requirements of users, various advanced ball and seat hardening technologies can be adopts, including HVOF coating, nickel-base alloy spray welding,high nickel alloy spray welding, cobalt-case hard alloy spray welding, etc. Generally, the ball and seat surface hardness can reach HRC55~60 with the maximum value of HRC70. Generally, the heat resistance of the sealing face material can reach 540℃ with the maximum value of 980℃. The sealing face material has also good wear resistant and impact resistant performances.

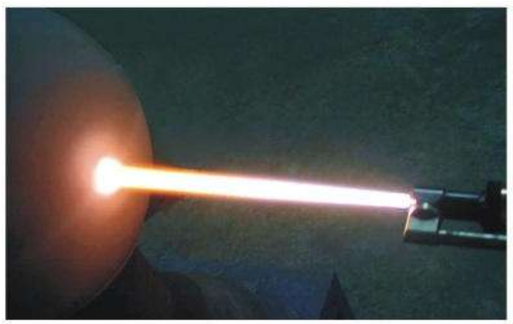

2.Flexuble Valve Opening and Closing

Under the service condition of high temperature, the ball and seat will expand too much because of thermal expansion, and thus causing that the valve cannot be opened. The ball valve adopts the disc spring or spring loaded sealing structure so that thermal expansion of parts under high temperature can be absorbed by the disc spring or spring, and it is ensured that the valve will be flexibly opened and closed under high temperature without expanding too much under high temperature.

3.Fireproof Structure Design

In the metal to metal structure for the valve, the gasket is the stainless steel+flexible graphite and the packing is the flexible graphite. Therefore, reliable sealing of the valve can be ensured even in cas of fire.

4.Double Block and Bleed (Metal Seated Trunnion Ball Valve)

The metal seated trunnion ball valve usually adopts the sealing structure before the ball. When the valve us closed and the middle cavity is emptied through the discharge valve, the upstream and downstream seats will independently block the fluid at the inlet and outlet to realize double block function. The metal seated floating ball valve usually adopts the sealing structure after the ball. Unidirectional sealing is generally adopts with flow direction marked on the body. If users have special requirements, bidirectional sealing structure can be adopted.

5.Reliable Sealing Performance

The unique ball grinding technology is adopts. Through rotation of the ball and the grinder at different positions, the ball surface will achieve high roundness and fineness. The low pressure sealing of valve seat is realized by spring pre-tightening. In addition, the piston effect of valve seat is designed reasonably, which realizes high pressure sealing by the pressure of the medium itself. The sealing level of the valve meet the requirements of level IV in ANSI B16.104.

Metal seated floating ball valve

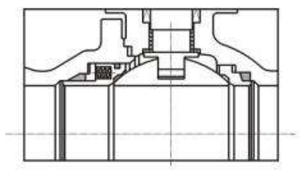

Metal seated trunnion ball valve

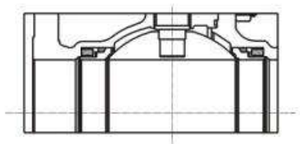

Cast Steel Floating Ball Valve

1	Body
2	Stud
3	Sealing gasket
4	Back seat
5	Ball
6	Front seat
7	Disc spring
8	Sealing gasket
9	Bonnet
10	Hexagon nut
11	Stem
12	Thrust bearing
13	Sliding bearing
14	Packing
15	Packing bushing
16	Packing gland
17	Socket head cap screw
18	Stopper
19	Retainer ring



Part Materials and Main Parameters

Nominal diameter (in)			NPS 1/2~8				
Nominal pressure (MPa)			Class150~Class600				
	No.	Part Name	Material				
			Carbon steel	Stainless steel			
Materials of parts	1	Body	ASTM A216 WCB	ASTM A351 CF8	ASTM A351 CF8M	ASTM A351 CF3	ASTM A351 CF3M
	2	Stud	A193 B7M	A320 B8	A320 B8M	A320 B8	A320 B8M
	3	Sealing gasket	Graphite				
	4	Back seat	ASTM A105+HF	ASTM A182 304+HF	ASTM A182 316+HF	ASTM A182 304L+HF	ASTM A182 316L+HF
	5	Ball	ASTM A105+HF	ASTM A182 304+HF	ASTM A182 316+HF	ASTM A182 304L+HF	ASTM A182 316L+HF
	6	Front seat	ASTM A105+HF	ASTM A182 304+HF	ASTM A182 316+HF	ASTM A182 304L+HF	ASTM A182 316L+HF
	7	Disc spring	17-7PH				
	8	Sealing gasket	Graphite				
	9	Bonnet	ASTM A216 WCB	ASTM A351 CF8	ASTM A351 CF8M	ASTM A351 CF3	ASTM A351 CF3M
	10	Hexagon nut	A194-2HM	A194-8	A194-8M	A194-8	A194-8M
	11	Stem	ASTM A182 F6a	ASTM A182 304	ASTM A182 316	ASTM A182 304L	ASTM A182 316L
	12	Thrust bearing	SST+Graphite				
	13	Sliding bearing	TF-2				
	14	Packing	Graphite				
	15	Packing bushing	ASTM A182 F6a	ASTM A182 F6a	ASTM A182 F6a	ASTM A182 F6a	ASTM A182 F6a
	16	Packing gland	ASTM A216 WCB	ASTM A216 WCB	ASTM A216 WCB	ASTM A216 WCB	ASTM A216 WCB
	17	Socket head cap screw	A193 B7M	A193 B7M	A193 B7M	A193 B7M	A193 B7M
	18	Stopper	A3・HZn	A3・HZn	A3・HZn	A3・HZn	A3・HZn
	19	Retainer ring	65Mn	65Mn	65Mn	65Mn	65Mn
Applicable service conditions		Applicable media	Water, steam, oil, coal gas, liquefied gas, natural gas,	Nitric acid	Acetic acid	Strong Oxidizer	Urea
		Applicable temperature	-29~+425℃	≤200℃			
Design and manufacturing			ASME B16.34				
Face-to-face dimensions			ASME B16.10				
Type of connection			Flange	ASME B16.5		Butt welding	ASME B16.25
Pressure test			API 598				
Transmission mode			Manual, worm and worm gear transmission, pneumatic, electric				

Forged Steel Floating Ball Valve

1	Body
2	Bonnet
3	Ball
4	Stem
5	Seat
6	Lower cover
7	Connection plate
8	Spring seat
9	Sealing gasket
10	Packing bushing
11	Packing gland
12	Spring
13	Stud
14	Hexagon nut
15	Hexagon bolt
16	Hexagon nut
17	Stud
18	Socket head cap screw
19	Pin
20	Flat key
21	Packing
22	Metal wound gasket
23	Metal wound gasket
24	Thrust bearing
25	Sliding bearing
26	Air release valve
27	Drainage valve



Part Materials and Main Parameters

Nominal diameter (in)			NPS 1/2~8				
Nominal pressure (MPa)			Class150~Class600				
	No.	Part Name	Material				
			Carbon steel	Stainless steel			
Materials of parts	1	Body	ASTM A105	ASTM A182 304L	ASTM A182 316	ASTM A182 304	ASTM A182 316L
	2	Bonnet	ASTM A105	ASTM A182 304L	ASTM A182 316	ASTM A182 304	ASTM A182 316L
	3	Ball	ASTM A105+HF	ASTM A182 304L+HF	ASTM A182 316+HF	ASTM A182 304+HF	ASTM A182 316L+HF
	4	Stem	ASTM A182 F6a	ASTM A182 304L	ASTM A182 316	ASTM A182 304	ASTM A182 316L
	5	Seat	ASTM A105+HF	ASTM A182 304L+HF	ASTM A182 316+HF	ASTM A182 304+HF	ASTM A182 316L+HF
	6	Lower cover	ASTM A105 · CHR	ASTM A182 304L	ASTM A182 316	ASTM A182 304	ASTM A182 316L
	7	Connection plate	ASTM A105	ASTM A182 304L	ASTM A182 316	ASTM A182 304	ASTM A182 316L
	8	Spring seat	ASTM A105 · CHR	ASTM A182 304L	ASTM A182 316	ASTM A182 304	ASTM A182 316L
	9	Sealing gasket	Graphite				
	10	Packing bushing	ASTM A182 F6a	ASTM A182 F6a	ASTM A182 F6a	ASTM A182 F6a	ASTM A182 F6a
	11	Packing gland	ASTM A216 WCB	ASTM A216 WCB	ASTM A216 WCB	ASTM A216 WCB	ASTM A216 WCB
	12	Spring	17-7PH				
	13	Stud	A193 B7M	A320 B8	A320 B8M	A320 B8	A320 B8M
	14	Hexagon nut	A194-2HM	A194-8	A194-8M	A194-8	A194-8M
	15	Hexagon bolt	A193 B7M	A320 B8	A320 B8M	A320 B8	A320 B8M
	16	Hexagon nut	A194-2H	A194-8	A194-8	A194-8	A194-8
	17	Stud	A193 B7M	A320 B8	A320 B8M	A320 B8	A320 B8M
	18	Socket head cap screw	A193 B7M	A320 B8	A320 B8M	A320 B8	A320 B8M
	19	Pin	ANSI 1035	ANSI 1035	ANSI 1035	ANSI 1035	ANSI 1035
	20	Flat key	ANSI 1045	ANSI 1045	ANSI 1045	ANSI 1045	ANSI 1045
	21	Packing	Graphite				
	22	Metal wound gasket	SST+Graphite				
	23	Metal wound gasket	SST+Graphite				
	24	Thrust bearing	SST+Graphite				
	25	Sliding bearing	Combined parts	TF-2			
	26	Air release valve	Combined parts	Combined parts	Combined parts	Combined parts	Combined parts
	27	Drainage valve		Combined parts	Combined parts	Combined parts	Combined parts
Applicable service conditions		Applicable media	Water, steam, oil, gas, liquefied petroleum gas, natural gas,	Nitric acid	Acetic acid	Strong Oxidizer	Urea
		Applicable temperature	≤200℃				
Design and manufacturing			API 6D				
Face-to-face dimensions			ASME B16.10				
Type of connection			Flange	ASME B16.5		Butt welding	ASME B16.25
Pressure test			API 598、API 6D				
Transmission mode			Manual, worm and worm gear transmission, pneumatic, electric				

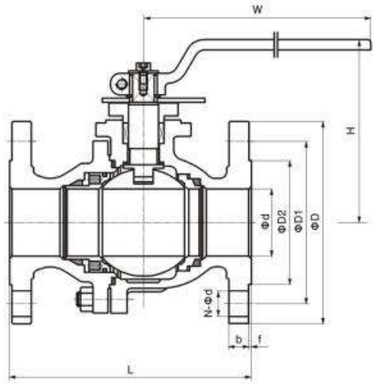

Floating cast steel ball valve

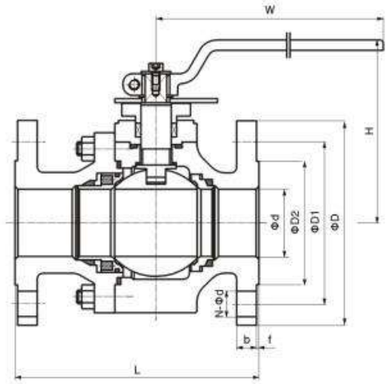

Floating forged steel ball valve

Pressure rating	Nominal Diameter		d	Flange		Butt welding	Flanged						W	Cast steel	Forged steel	Weight (Kg)	
Class	NPS	DN		L(RF)	L(RTJ)	L(BW)	D	D1	D2	f	b	N-Φd		H	H	Cast steel	Forged steel
150	1/2"	15	13	108	/	140	90	60.5	35	2	9	4-Φ16	140	80	63	2.3	△
	3/4"	20	19	117	/	152	100	70	43	2	10	4-Φ16	140	86	82.5	3	△
	1"	25	25	127	/	165	110	79.5	51	2	11	4-Φ16	140	95	93.5	4.5	△
	1 1/4"	32	32	140	/	178	115	89	64	2	11	4-Φ16	180	101	96	5.5	△
	1 1/2"	40	38	165	/	190	125	98.5	73	2	13	4-Φ16	180	128.5	128	7	△
	2"	50	50	178	191	216	150	120.5	92	2	14.5	4-Φ19	200	136	136	9.5	△
	3"	80	75	203	216	283	190	152.5	127	2	17.5	4-Φ19	300	145	145	19	△
	4"	100	100	2229	241	305	230	190.5	157	2	22.5	8-Φ19	650	197.5	204	33	△
300	1/2"	15	13	140	/	140	95	66.5	35	2	13	4-Φ16	140	80	63	2.5	△
	3/4"	20	19	152	/	152	115	82.5	43	2	14.5	4-Φ19	140	82	82.5	3.5	△
	1"	25	25	165	/	165	125	89	51	2	16	4-Φ19	140	84	92.5	5.5	△
	1 1/4"	32	32	178	/	178	135	98.5	64	2	17.5	4-Φ19	180	101	96	8	△
	1 1/2"	40	38	190	/	190	155	114.5	73	2	19.5	4-Φ22	180	128.5	128	10.5	△
	2"	50	50	216	232	216	165	127	92	2	21	8-Φ19	200	136	136	15	△
	3"	80	75	283	298	283	210	168.5	127	2	27	8-Φ22	300	145	145	30	△
	4"	100	100	305	321	305	255	200	157	2	30.5	8-Φ22	650	197.5	204	55	△
600	1/2"	15	13	165	/	165	95	66.5	35	7	14.5	4-Φ16	140	88	78	3.5	△
	3/4"	20	19	190	/	190	115	82.5	43	7	16	4-Φ19	140	98	82.5	6.5	△
	1"	25	25	216	/	216	125	89	51	7	17.5	4-Φ19	180	115	102	8.5	△
	1 1/4"	32	32	229	/	229	135	98.5	64	7	21	4-Φ19	200	125	110	10.5	△
	1 1/2"	40	38	241	/	241	155	114.5	73	7	22.5	4-Φ22	250	142	128	13.5	△
	2"	50	50	292	295	292	165	127	92	7	26	8-Φ19	300	160	142	△	△
	3"	80	75	356	359	356	210	168.5	127	7	32	8-Φ22	650	178	156	△	△

△ Please consult the factory:
Note: The weight value is only for flanged valve. Please consult our factory for higher nominal diameter or weight. Any modification to size H, H1,and weight will not be notified otherwise.

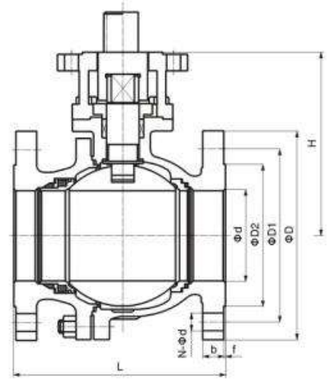

Floating cast steel ball valve

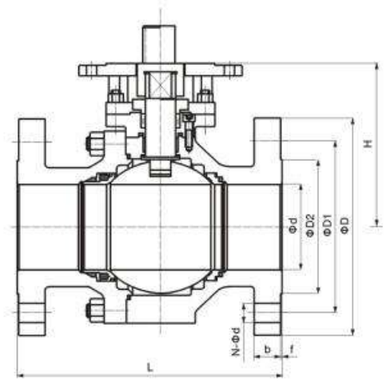

Floating forged steel ball valve

Pressure rating	Nominal Diameter		d	Flange		Butt welding	Raised face flange						Cast steel	Forged steel	Weight (Kg)	
Class	NPS	DN		L(RF)	L(RTJ)	L(BW)	D	D1	D2	f	b	N-Φd	H	H	Cast steel	Forged steel
150	4"	100	100	229	241	305	230	190.5	157	2	22.5	8-Φ19	220	197	33	△
	6"	150	150	394	406	457	280	241.5	216	2	24	8-Φ22	300	250	93	△
	8"	200	201	457	470	521	345	298.5	270	2	27	8-Φ22	355	290	160	△
300	4"	100	100	305	321	305	255	200	157	2	30.5	8-Φ22	220	197	55	△
	6"	150	150	403	419	457	320	270	216	2	35	12-Φ22	300	250	118	△
	8"	200	201	502	518	521	380	330	270	2	40	12-Φ25	355	290	200	△
600	4"	100	100	432	435	432	275	216	157	7	38.5	8-Φ25	230	305	△	△
	6"	150	150	559	562	559	355	292	216	7	48	12-Φ29	310	260	△	△
	8"	200	201	660	664	660	420	349	270	7	56	12-Φ32	370	310	△	△

△ Please consult the factory:
Note: The weight value is only for flanged valve. Please consult our factory for higher nominal diameter or weight. Any modification to size H, H1,and weight will not be notified otherwise.

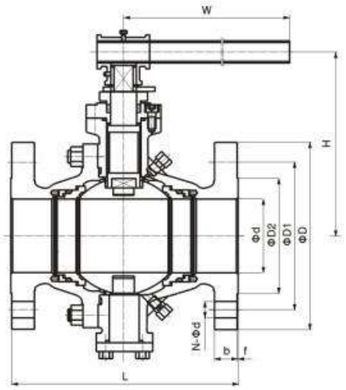

Trunnion cast steel ball valve

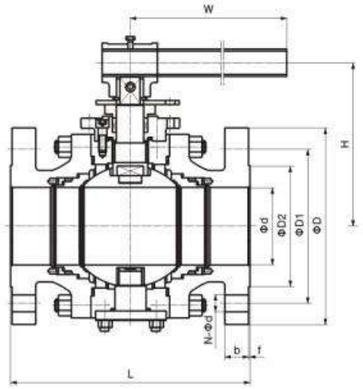

Trunnion forged steel ball valve

Pressure rating	Nominal Diameter		d	Flange		Butt welding	Raised face flange							W	Cast steel	Forged steel	Weight (Kg)	
Class	NPS	DN		L(RF)	L(RTJ)	L(BW)	D	D1	D2	D3	f	b	N-Φd		H	H	Cast steel	Forged steel
150	2"	50	50	178	191	216	150	120.5	92	/	2	14.5	4-Φ19	200	174	153	14	19
	3"	80	75	203	216	283	190	152.5	127	/	2	17.5	4-Φ19	300	178	162	26	28
	4"	100	100	229	271	305	230	190.5	157	/	2	22.5	8-Φ19	650	288	240	45	48
300	2"	50	50	216	232	216	165	127	92	/	2	21	8-Φ19	200	174	153	17	22
	3"	80	75	283	298	283	210	168.5	127	/	2	27	8-Φ22	300	178	162	35	38
	4"	100	100	305	321	305	255	200	157	/	2	30.5	8-Φ22	650	288	240	55	60
600	2"	50	50	292	295	292	165	127	92	/	7	26	8-Φ19	300	178	153	28	28
	3"	80	75	356	359	356	210	168.5	127	/	7	32	8-Φ22	300	283	244	55	65
900	2"	50	50	368	371	368	215	165	124	95.25	7.92	38.5	8-Φ25	650	233	222	△	57
	3"	80	75	381	384	381	240	190.5	156	123.83	7.92	38.5	8-Φ25	800	276	255	△	87

△ Please consult the factory:
Note: The weight value is only for flanged valve. Please consult our factory for higher nominal diameter or weight. Any modification to size H, H1,and weight will not be notified otherwise.

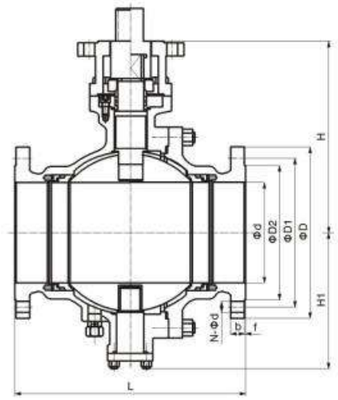

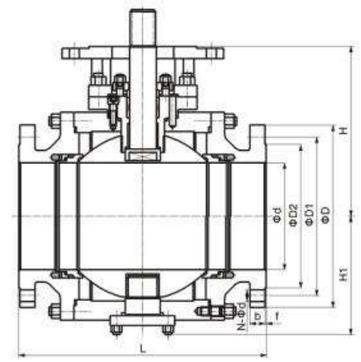

Pressure rating	Nominal Diameter		d	Flange		Butt welding	Raised face flange							Cast steel		Forged steel		Weight (Kg)	
Class	NPS	DN		L(RF)	L(RTJ)	L(BW)	D	D1	D2	D3	f	b	N-Φd	H	H1	H	H1	Cast steel	Forged steel
150	6"	150	150	394	406	457	280	241.5	216	/	2	24	8-Φ22	310	213.5	276	178.5	120	170
	8"	200	201	457	470	521	345	298.5	270	/	2	27	8-Φ22	384.5	272	319	222	300	300
	10"	250	252	533	546	559	405	362	324	/	2	29	12-Φ25	434	363	370	265	315	430
	12"	300	303	610	622	635	485	432	381	/	2	30.5	12-Φ25	513	412	419.5	310	500	680
	14"	350	334	686	699	762	535	476	413	/	2	33.5	12-Φ29	535	436	432	334	670	930
	16"	400	385	762	775	838	595	540	470	/	2	35	16-Φ29	575	462	515	375	900	1130
	18"	450	436	864	876	914	635	578	533	/	2	38.5	16-Φ32	615	507	560	410	1080	1560
	20"	500	487	914	927	991	700	635	587	/	2	41.5	20-Φ32	685	536	623	458	1560	2020
300	6"	150	150	403	419	457	320	270	216	/	2	35	12-Φ22	310	213.5	276	178.5	160	180
	8"	200	201	502	518	521	380	330	270	/	2	40	12-Φ25	384.5	272	319	222	260	258
	10"	250	252	568	584	559	445	387.5	324	/	2	46.5	16-Φ29	434	363	370	265	380	413
	12"	300	303	648	664	635	520	451	381	/	2	49.5	16-Φ32	513	412	419.5	310	570	629
	14"	350	334	762	778	762	585	514.5	413	/	2	52.5	20-Φ32	535	436	432	334	750	887
	16"	400	385	838	854	838	650	571.5	470	/	2	56	20-Φ35	575	462	515	375	1120	1340
	18"	450	436	914	930	914	710	628.5	533	/	2	59	24-Φ35	615	507	560	410	1460	1610
	20"	500	487	991	1010	991	775	686	584	/	2	62	24-Φ35	685	536	623	458	2030	2200
600	4"	100	100	432	435	432	275	216	157	/	7	38.5	8-Φ25	234	165	261	150	102	118
	6"	150	150	559	562	559	355	292	216	/	7	48	12-Φ29	335	251	283	192.5	250	250
	8"	200	201	660	664	660	420	349	270	/	7	56	12-Φ32	430	290	339.5	235	430	430
	10"	250	252	787	791	787	510	432	324	/	7	64	16-Φ35	466	334	380	280	680	680
	12"	300	303	838	841	838	560	489	381	/	7	67	20-Φ35	528	383	432	320	985	985
	14"	350	334	889	892	889	605	527	413	/	7	70	20-Φ39	600	398	473	350	1002	1002
	16"	400	385	991	994	991	685	603	470	/	7	77	20-Φ41	630	434	515	395	1160	1160
	18"	450	436	1092	1095	1092	745	654	533	/	7	83	20-Φ44	685	473	560	439	1611	1611
	20"	500	487	1194	1200	1194	815	724	584	/	7	89	24-Φ44	740	506	617	490	2985	2985
900	4"	100	100	457	460	457	290	235	181	149.23	7.92	45	8-Φ32	310	186	267	267	△	△
	6"	150	150	610	613	610	380	317.5	241	211.12	7.92	56	12-Φ32	372	262	288.5	200	△	△
	8"	200	201	737	740	737	470	393.5	305	269.88	7.92	64	12-Φ29	428	300	300	250	△	△
	10"	250	252	838	841	838	545	470	362	323.85	7.92	70	16-Φ39	477	346	410	300	△	△
	12"	300	303	965	968	965	610	533.5	419	381	7.92	79.5	20-Φ39	543	388	432	320	△	△
	14"	350	322	1029	1038	1029	640	559	467	419.1	11.13	86	20-Φ42	558	402	△	△	△	△
	16"	400	373	1130	1140	1130	705	616	524	469.9	11.13	89	20-Φ45	605	442	△	△	△	△
	18"	450	423	1219	1232	1219	785	686	594	533.4	12.7	102	20-Φ51	657	489	△	△	△	△
	20"	500	471	1321	1334	1321	855	749.5	648	584.2	12.7	108	20-Φ54	729	538	△	△	△	△

△ Please consult the factory:
Note: The weight value is only for flanged valve. Please consult our factory for higher nominal diameter or weight. Any modification to size H, H1,and weight will not be notified otherwise.



TEJI VALVE GROUP CO., LTD

www.teji-valves.com

Other Valve Series

TEJI®

LEADING THE GLOBAL VALVE INDUSTRY



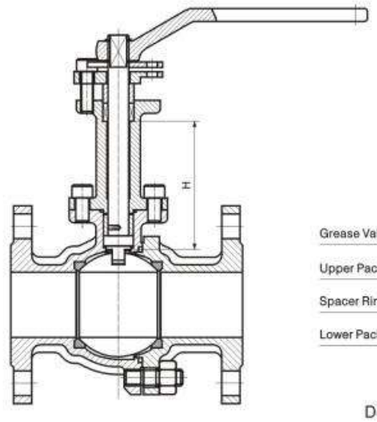

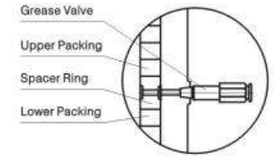

Double packing combination chart

Purpose

Cryogenic ball valves are mainly used in the chemical equipment of ethylene and LNG etc. to handle cryogenic liquid medium like ethylene, Liquid oxygen, liquid hydrogen and so on. These types of inflammable and explosive medium can be volumetrically expanded by several hundred times when being gasified under temperature rise ,and are difficult to manufacture due to their highly penetrative and leaky Properties.

Structure Characteristics

1, The materials of compression parts can endure the expansion and shrinkage resulted from the temperature variation of medium, and seal structure is away from permanent deformation under temperature changes.To work under the conditions below -100℃,the parts of valve shall be subject to sub-zero treatment before finish machining. Namely, have the parts cooled in liquid nitrogen box, when the temperature of parts reaches-196℃, keep the temperature for 1-2h, then take them out to have them to the normal temperature naturally, and do in this way twice.
2, Bonnet is shaped long-necked for the purpose to protect the function of packing box, making packing box somewhat away from low temperature to ensure good seal of packing. Besides, it can be wound with cold insulating materials to prevent loss of cold energy. The length of neck (H, see the drawing on the left)depends on service temperature and the thickness of cold insulating material. When the seal effect of packing turns lower, fill in grease to form up oil seal layer in the middle of packing box(see combined packing structure)to lower the differential pressure of packing box and enhance the dependability of seal.
3, To serve a temperature below -100℃, the material of valve stem shall be treated with chromeplating or nitriding to enhance the surface hardness of valve stem and the dependability of packing.
4, Cryogenic ball valve takes a structure to avoid abnormal pressure rise. As the medium in cryogenic valve is gasified and rapidly expanded in volume, the pressure will go extremely high. When the pressure in the middle cavity of valve rises, the middle cavity and the inlet side can be communicated, or a relief can be mounted at the inlet side of valve, thus to ensure the safe use of valves.
5, The gaskets used on cryogenic ball valves may function dependable seal and restoration under normal and cryogenic or under the conditions of temperature changes.

Main Parts and Materials

Part Name	Material
Body	Cast steel ,Cast stainless steel
Bonnet	Cast steel ,Cast stainless steel
Stem	Martensitic stainless steel ,Austenitic stainless steel
Ball	Martensitic stainless steel ,Austenitic stainless steel
Seal ring	Reintorced PTFE ,Carbon tibre ,PEEK

Technical Standard

Standard	GB	API
Design codes	GB/T12237	ASME B16.34
Applications of cryogenic technology	JB/T 7794	BS 6364
Pressure-temperature rating	GB/T 12224	ANSI B16.34
Face to face dimension	GB/T 12221	ASME B16.10
Flange	GB/T 9113/HG 20596	ASME B16.5
Test and Inspection	JB/T 9092*	API 598*

Cryogenic ball valves shall be subject to pressure test under low temperature after under normal temperature, with its principle is shown at the diaphram of cryogenic ball valves.

Pressure Test of Ball Valve Under Cryogenic

According to the requiements of certain standards, the test of cryogenic ball valves shall be carried out under both normal and cryogenic. With its principle as following:

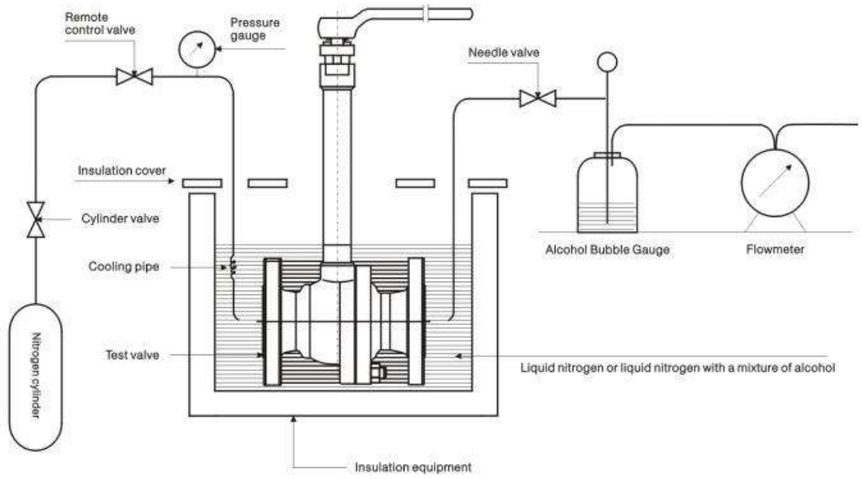

Cryogenic test device type

Main External Dimensions & Weight

The main overall connection dimensions of low temperature ball valve may be referred to side-mounted float ball valve and trunnion ball valve, with the height of valve being the height of the long neck added to that basis, so dimensions list is omitted here.

Dimensions of The Bonnet and Extended Stem of The Cryogenic Ball Valve(for Reference)

Nominal Size		Neck Dimension (mm)			Nominal Size		Pressure
DN	NPS	≥-60℃	≥-100℃	<-100℃	DN	in	PN1.6-10.0MPa 150Lb、300Lb
15	1/2	90	110	130	15	1/2	△/●
20	3/4	100	110	140	20	3/4	△/●
25	1	100	120	150	25	1	△/●
32	11/4	110	120	150	32	11/4	△/●
40	11/2	110	130	160	40	11/2	△/●
50	2	110	130	170	50	2	△/★/●
65	11/2	120	140	180	65	11/2	△/★/●
80	3	120	150	190	80	3	△/★/●
100	4	130	160	200	100	4	△/★/●
125	5	130	160	200	125	5	△/★/●
150	6	140	170	220	150	6	△/★/●
200	8	140	170	220	200	8	△/★/●
250	10	150	180	240	250	10	△/★/●
300	12	150	180	240	300	12	△/★/●
350	14	160	190	250	350	14	△/★/●
400	16	160	190	250	400	16	△/★/●

Note: ★Stands for electrical operated valves; △Stands for pneumatic operated valves;
●Stands for lever operated valves;
Those not covered in the table can be made according to users' requirements.

Usage

The three-way/four-way ball valve is used for switching.converging and diverging pipeline medium flow direction.It is widely applied in metallurgy, mine, petroleum.chemical industry,electric power,light industry,shipping industry and automation control systems. suitable for service conditions such as switching.mixing and diverging of fluid. gas and powder.

Structural Characteristics

The three-way/four-way ball valve 'is provided with reliable sealing and smooth flow channel so as to ensure accuracy of opening and closing through small fluid pressure loss and stable flow channel According to the forms of flow channel. the valve can be cassified into "Y" pattern three-way ball valve. "L" pattern three-way ball valve. "T" pattern three-way ball valve and "LL" pattern four-way ball valve.

"Y" Pattern Three-way Ball Valve (q42 Type)

The form of flow channel is "Y" pattern. which can effectively realize switching from service condition 1 to service condition 2 It is mainly used for switching "Y" pattern pipeline flow direction.

Two service conditions of "Y" pattem three-way ball valve

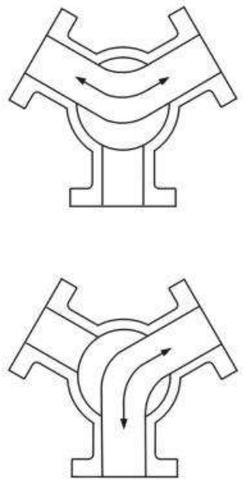



L" Pattern Three-way Ball Valve (q44 Floating Type, Q49 Trunnion Type)

The "L" pattern three-way ball valve is used for switching pipeline medium flow direction It can connect two flow channels that are vertical with each other. The ordinary "L" pattern Floating three-way ball valve may not be suitable for some service conditions. which shall be paid special attention to when users select it.

Two service conditions of "L" pattem three-way ball valve

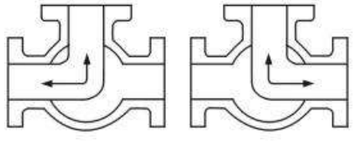

Several service conditions of which the ordinary "L" pattem floating three-way ball valve is not suitable

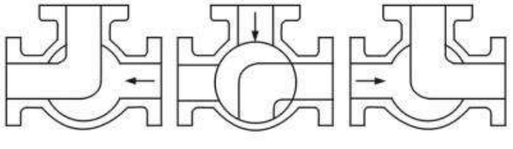

" T" Pattern Three-way Ball Valve (q45 Floating Type, Q48 Trunnion Type)

The " T" pattem three-way ball valve is used for switching. converging and diverging medium flow direction The "T" pattern ball channel can make three channels connect with each other or two of them connect with each other to realize two, three or found kinds of functions. Different valve designs are adopted to realize different functions Therefore. users shall make detailed descriptions to the service requirements when selecting and ordering the "T" pattern three-way ball valve, so that our company can make designs and configurations correctly The ordinary " T" pattern floating three-way ball valve may not be suitable for some service conditions. which shall be paid special attention to when users select it.

Several service conditions of "T" pattem three-way ball valve

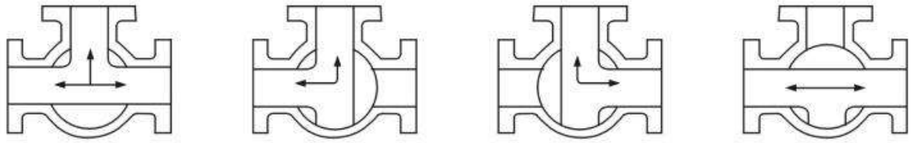

Several service conditions of which the ordinary "T" pattem floating three-way ball valve is not suitable

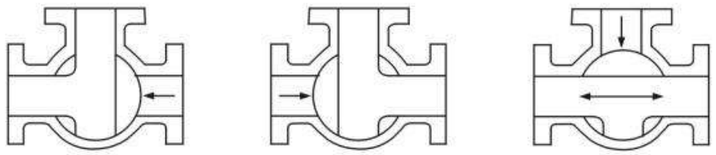

" LL" Pattern Four-way Ball Valve

The " LL" pattern four-way ball valve is provided with four seats to realize switching from service condition 1 to service condition 2. It can simultaneously switch the flow direction of two media. which realizes the effect of multiple functions in one valve with convenience and swiftness.

The work form is shown as follows:

1. When A(C) (s the inlet. the two connections of A->B (C->D) or A->C(C->A) can be realized.
2. A cannot be relized.
3. A->D(C->B) or D->A(B->C) is impossible.

Service conditions of "LL" pattem four-way ball valve

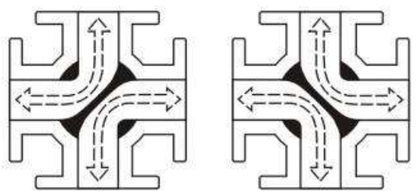



Forged Trunnion Ball Valve

1	Body
2	Stud
3	Ball
4	Seat ring
5	O ring
6	Anti-fire packing
7	Spring
8	Anti-fire Gasket
9	O ring
10	Bonnet
11	Hexagon nut
12	Ball
13	Bonnet
14	Flat key
15	Stem
16	Sliding bearing
17	Thrust bearing
18	O ring
19	Anti-fire gasket
20	Seal gland
21	Socket head cap screw
22	Packing
23	Packing gland
24	Drainge valve
25	Thrust bearing
26	Lower stem
27	Lower cover
28	Sealant injection valve
29	Anti-static device

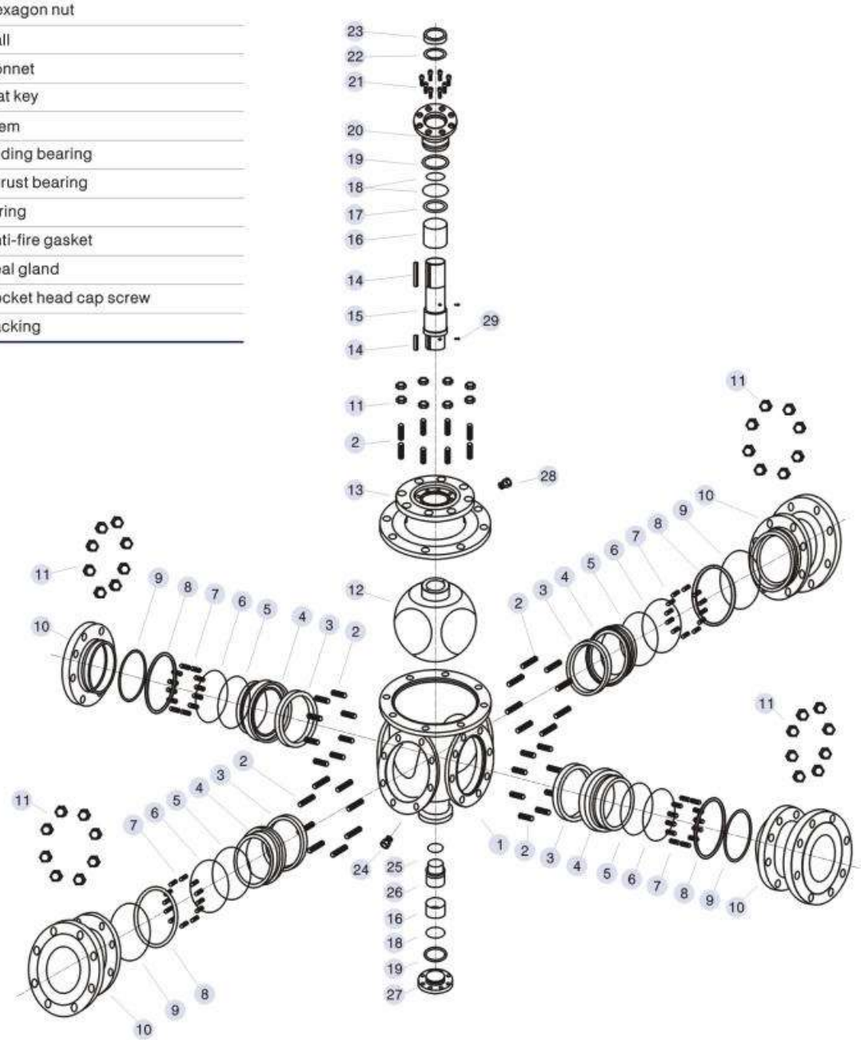

Part Materials and Main Parameters

Nominal diameter (in)			NPS 2~20				
Nominal pressure (MPa)			Class150~Class300				
	No.	Part Name	Material				
			Carbon steel	Stainless steel			
Materials of parts	1	Body	ASTM A216 WCB	ASTM A351 CF8	ASTM A351 CF8M	ASTM A351 CF3	ASTM A351 CF3M
	2	Stud	A193 B7M	A320 B8	A320 B8M	A320 B8	A320 B8M
	3	Ball	PTFE/NYLON/PEEK/PPL				
	4	Seat ring	ASTM A105 · ENP	ASTM A182 304	ASTM A182 316	ASTM A182 304L	ASTM A182 316L
	5	O ring	VITON				
	6	Anti-fire packing	Graphite				
	7	Spring	17-7PH				
	8	Anti-fire Gasket	SST+Graphite				
	9	O ring	VITON				
	10	Bonnet	ASTM A216 WCB	ASTM A351 CF8	ASTM A351 CF8M	ASTM A351 CF3	ASTM A351 CF3M
	11	Hexagon nut	A194 2HM	A194-8	A194-8M	A194-8	A194-8M
	12	Ball	ASTM A105 · ENP	ASTM A182 304	ASTM A182 316	ASTM A182 304L	ASTM A182 316L
	13	Bonnet	ASTM A216 WCB	ASTM A351 CF8	ASTM A351 CF8M	ASTM A351 CF3	ASTM A351 CF3M
	14	Flat key	ANSI 1045	ANSI 1045	ANSI 1045	ANSI 1045	ANSI 1045
	15	Stem	ASTM A182 F6A	ASTM A182 304	ASTM A182 316	ASTM A182 304L	ASTM A182 316L
	16	Sliding bearing	Metal+PTFE	Metal+PTFE	Metal+PTFE	Metal+PTFE	Metal+PTFE
	17	Thrust bearing	PTFE				
	18	O ring	VITON				
	19	Anti-fire gasket	SST+Graphite				
	20	Seal gland	ASTM A105 · ENP	ASTM A182 304	ASTM A182 316	ASTM A182 304L	ASTM A182 316L
	21	Socket head cap screw	A193 B7M	A320 B8	A320 B8M	A320 B8	A320 B8M
	22	Packing	Graphite				
	23	Packing gland	ASTM A182 F6A	ASTM A182 F6A	ASTM A182 F6A	ASTM A182 F6A	ASTM A182 F6A
	24	Drainge valve	Combined parts	Combined parts	Combined parts	Combined parts	Combined parts
	25	Thrust bearing	PTFE				
	26	Lower stem	ASTM A182 F6A	ASTM A182 304	ASTM A182 316	ASTM A182 304L	ASTM A182 316L
	27	Lower cover	ASTM A105 · ENP	ASTM A182 304	ASTM A182 316	ASTM A182 304L	ASTM A182 316L
	28	Sealant injection valve	Combined parts	Combined parts	Combined parts	Combined parts	Combined parts
	29	Anti-static device	Combined parts	Combined parts	Combined parts	Combined parts	Combined parts
Applicable Series Conditions		Applicable media	Water, steam, oil, gas, liquefied gas, natural gas, etc.	Nitric acid	Acetic acid	Strong oxidizer	Urea
		Applicable temperature	≤120℃ (PTFE)、≤80℃ (NYLON)、≤250℃ (PEEK)、≤250℃ (PPL)				
Design and manufacturing			API 608、API6D				
Type of connection			Flange	ASME B16.5		Wafer	ASME B16.5
Pressure test			API 598、API 6D				
Transmission mode			Manual, worm and worm gear transmission, pneumatic, electric				

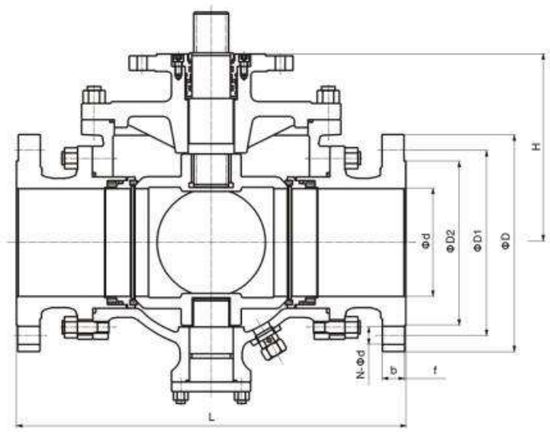

Pressure Rating	Nominal Diameter		d	L	Flanged							H	Weight (kg)
Class	NPS	DN			D	D1	D2	D3	f	b	N-Φd		
150	2"	50	50	260	150	120.5	92	/	2	14.5	4-Φ19	205	Δ
	3"	80	75	320	190	152.5	127	/	2	17.5	4-Φ19	245	Δ
	4"	100	100	370	230	190.5	157	/	2	22.5	8-Φ19	305	Δ
	6"	150	150	510	280	241.5	216	/	2	24	8-Φ22	340	Δ
	8"	200	201	580	345	298.5	270	/	2	27	8-Φ22	425	Δ
	10"	250	252	670	405	362	324	/	2	29	12-Φ25	450	Δ
	12"	300	303	760	485	432	381	/	2	30.5	12-Φ25	530	Δ
	14"	350	334	850	535	476	413	/	2	33.5	12-Φ29	630	Δ
	16"	400	385	980	595	540	470	/	2	35	16-Φ29	680	Δ
	18"	450	436	1080	635	578	533	/	2	38.5	16-Φ32	625	Δ
	20"	500	487	1220	700	635	584	/	2	41.5	20-Φ32	670	Δ
	24"	600	589	1360	815	749.5	692	/	2	46.5	20-Φ35	705	Δ
300	2"	50	50	260	165	127	92	/	2	21	8-Φ19	205	Δ
	3"	80	75	320	210	168.5	127	/	2	27	8-Φ22	245	Δ
	4"	100	100	370	255	200	157	/	2	30.5	8-Φ22	305	Δ
	6"	150	150	510	320	270	216	/	2	35	12-Φ22	340	Δ
	8"	200	201	580	380	330	270	/	2	40	12-Φ25	425	Δ
	10"	250	252	670	445	387.5	324	/	2	46.5	16-Φ29	450	Δ
	12"	300	303	760	520	451	381	/	2	49.5	16-Φ32	530	Δ
	14"	350	334	850	585	514.5	413	/	2	52.5	20-Φ32	630	Δ
	16"	400	385	980	650	571.5	470	/	2	56	20-Φ35	680	Δ
	18"	450	436	1080	710	628.5	533	/	2	59	24-Φ35	625	Δ
	20"	500	487	1220	775	686	584	/	2	62	24-Φ35	670	Δ
	24"	600	589	1360	915	813	682	/	2	68.5	24-Φ41	705	Δ

Note: The weight value is only for flanged valve. Please consult our factory for higher nominal diameter or weight. Amy modification to size H, H1and weight will not be notified otherwise.

Feature

1-piece body, hexanguar type.
Threaded ends to ANSI B1.20.1(NPT)
Conforms to ANSI B16.34, NACE MR-01-75.
Class 800(2000PSI); reduced bore.

Materials List

No.	Part name	Material
1	Body	ASTM A105/F316
2	Cap	ASTM A105/F316
3	Seat	RTFE
4	Ball	ASTM A351-CF8M(316)
5	Stem	ASTM A276-316
6	Packing	PTFE
7	Thrust washer	RTFE
8	Packing Gland	ASTM A276-304
9	Nut	CARBON STEEL PLATED
10	Handle	CARBON STEEL PLATED
11	Handle cover	PLASTIC
12	Gasket	PTFE
13	Spring Washer	C/S



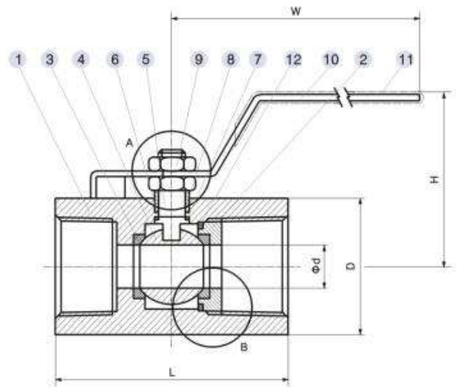

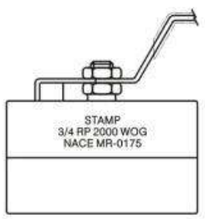

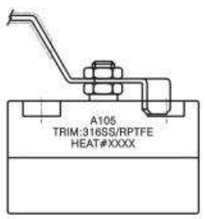



DETAIL A
1/4",3/8" ONLY

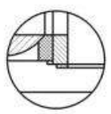

DETAIL B
1/4"~1" ONLY

Dimension List

NPS	DN	ΦD	D	L	H	W	Weight(kg)
1/4	8	5.0	21	43	34	70	0.11
1/2	15	9.0	30	62.5	60	120	0.34
3/8	10	7.0	25	47	37	70	0.18
3/4	20	12.5	36	70	64	120	0.54
1	25	16.0	46	86	66	123	0.95
1 1/4	32	20.0	55	94	78	145	1.40
1 1/2	40	24.5	61	102	84	150	1.70
2	50	32.0	75	115	91	150	2.78

Standard Specification

1.Design and manufacture: GB/T 12237-2007
2.Face to face: GB/T 12221-2005
3.Connnection size: GB/T 9113-2000
4.Inspection and test: GB/T 13927-1992

Design speciality

1.Lever have locked device, prevent misuse ,more safety and reliable.
2.Anti-blow out stem
3.Easygoing operation
4.Acc. To API607 Fire safe design.
5.Both Full Bore and Reduced Bore are available
6.Anti-static device between stem and ball
7.End conn.: NPT Socket Weld BW(Extended body available)

Special Valve Performance Capabilities

Can be used to clean water, waste water,air,steam,food, pharmaceutical, chemical,oil , alkali and salt etc

Main Parts and Materials

No.	Part name	Material		
1	Body	CF8M	CF8	WCB
2	Bonnet	CF8M	CF8	WCB
3	Ball	316	304	
4	Seat	PTFE	PPL	
5	Stem	316	304	2Cr13
6	Anti-static	304		
7	Thrust gasket	PTFE		
8	Packing	PTFE		
9	Gasket	Enhanced PTFE, Flexible Gr.		
10	Gland packing	304		
11	Spring	304		
12	Nuts	304		
13	Loose resistant cover	304		
14	Soft gasket	304		
15	Bolts and nut	304		
16	Lever nuts	304		
17	Retainer	Plastic		
18	Lever	304		
19	Lever glove	304		
20	Positioning bolt	304		
21	Lock screw	CF8		
22	Packing washer	PTFE		



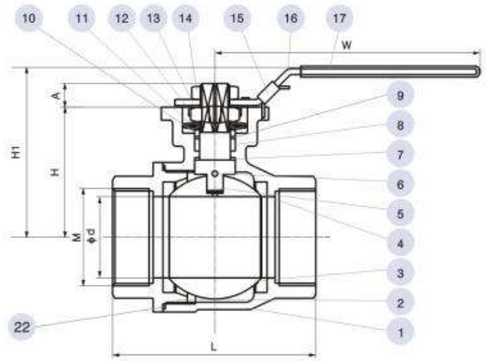

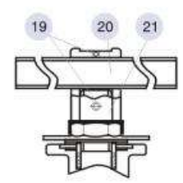

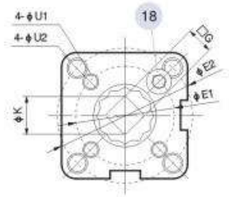

1000PSI Main Connection Size

NPS(in)	Φd	L	H	H1	A	W	ΦE1	ΦE2	G	ΦU1	ΦU2	M
1/4"	10.6	64	42	72	9	145	36	42	9	6	6	NPT BSP G RC
3/8"	12.7	64	42	72	9	145	36	42	9	6	6	
1/2"	15	64	42	72	9	145	36	42	9	6	6	
3/4"	20	70.4	46	80	9	145	36	42	9	6	6	
1"	25	85	54	90	11	175	42	50	11	6	7	
1 1/4"	32	94	64	95	11	175	42	50	11	6	7	
1 1/2"	38	105	70	106	14	194	50	70	14	7	9	
2"	50	125	80	113	14	194	50	70	14	7	9	
2 1/2"	65	155	95	150	17	265	70	102	17	9	11	
3"	80	173	111	159	17	265	70	102	17	9	11	

Standard Specification

1.Design and manufacture: GB/T 12237-2007
2.Body thickness: GB/T 12221
3.NPT screw Conn.:ASME B1.20.1
G screw conn.: GB/T 12716
RC screw conn.: GB/T 7306.2
4.Socket weld: ASME B16.11
5.Butt Weld: ASME B16.25,ASME B36.10M
6.inspection and test: GB/13927-1992

Design Speciality

1.Lever have locked device, prevent misuse ,more safety and reliable.
2.Anti-blow out stem
3.Easygoing operation
4.Acc. To API607 Fire safe design.
5.Both Full Bore and Reduced Bore are available
6.Anti-static device between stem and ball
7.End conn.: NPT Socket Weld BW(Extended body available)

Special Valve Performance Capabilities

Can be used to clean water, waste water,air,steam,food, pharmaceutical, chemical,oil , alkali and salt etc



Main Parts and Materials

No.	Part name	Material		
1	Body	CF8M	CF8	WCB
2	Bonnet	CF8M	CF8	WCB
3	Ball	316	304	
4	Seat	PTFE/RP TFE/PPL/Carbon fiber		
5	Nuts	A193 B8		A193 B7
6	Stem	316	304	2Cr13
7	Anti-static	304		
8	Thrust gasket	PTFE/Carbon fiber		
9	Packing	PTFE		
10	Packing protector	304		
11	Packing bushing	304		
12	Belleville spring	304		
13	Nuts	304		
14	Soft gasket	304		
15	Bolts and nut	304		
16	Lever nuts	304		
17	Retainer	304		
18	Lever	304		
19	Loose resistant cover	304		
20	Lever glove	Plastic		
21	Positioning bolts	304		
22	Locked screw	304		
23	Lever	304		
24	Wrench	CF8		

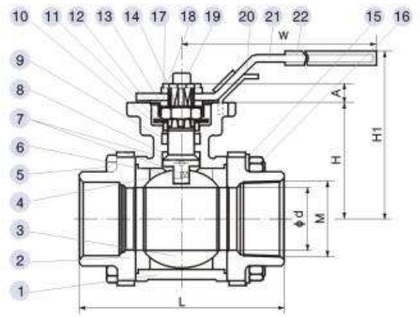

Socket weld (SW) connection　　Butt weld ends (BW) connection

1000PSI Main Connection Size

NPS(in)	Φd	f	L	H	H1	A	W	ΦE1	ΦE2	G	ΦU1	ΦU2	D	D1	M
1/2"	15	10	72	40	76	8	145	36	42	9	6	6	21.8	22	NPT BSP G RC
3/4"	20	13	82	46	82	8	145	36	42	9	6	6	27.2	28	
1"	25	13	90	57	100	11.5	165	42	50	11	6	7	34	34	
1 1/4"	32	13	112	64	95	12.5	165	42	50	11	6	7	42.6	43	
1 1/2"	38	13	120	71	118	16	200	50	70	14	7	9	48.7	50	
2"	50	16	145	81.5	129	20	200	50	70	14	7	9	61.2	61	
2 1/2"	65	16	185	95	152	20	250	70	102	17	9	11	74	76	
3"	80	16	208	109	159	20	265	70	102	17	9	11	90	92	
4"	100	19	268	142	205	22	400	/	102	22	/	11	115.6	115	

Standard Specification

1.Design and manufacture: GB/T12237-2007
2.NPT connection: ASME B 1.20.1
G connection: GB/T 12716
RC connection: GB/T 7306.2
3.Inspection and test: GB/T 13927-1992

Design Speciality

1.Standard locking handle, prevent misuse, be more safety and reliable.
2.Blowout proof stem
3.Reliable portable operation
4.Fire safe certified to API 607
5.Reduce port
6.Anti-static device
7.Connection end: screw, SW, BW(Prolong Body)

Special Valve Performance Capabilities

Apply to fresh water, sewage, water, air, steam, food, medicine, chemicals, oils, acid and alkali and salts.



Main Parts and Materials

No.	Part name	Material			
1	Body	WCB	CF8	CF8M	CF3
2	Sealing ring	PTFE/RP TFE/PPL/Carbon fiber			
3	Gasket	PTFE/RP TFE/PPL			
4	Packing	PTFE/Flexible Gr.			
5	Gland	304		316	304L
6	Handle	304			
7	Nut	A194 8			
8	Stem	F6a	304	17-4PH	304L
9	Ball	A276 420	304	316	304L
10	Gasket	304	304	316	304L
11	Bonnet	304	304	316	304L

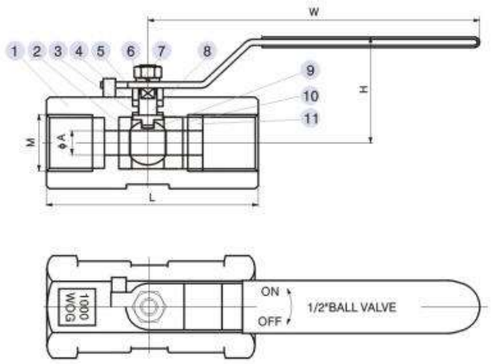

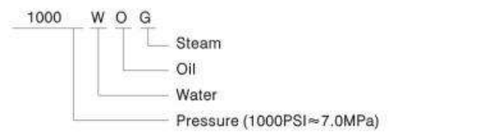

1000PSI Main Connection Size

NPS(in)	DN	ΦA	L	H	W	M
1/4"	6	4.5	40	35	64	NPT BSP G RC
3/8"	10	6	45	37	70	
1/2"	15	8.5	55	43.5	90	
3/4"	20	12	60	47	90	
1"	25	16	72	50	103	
11/4"	32	20	78	57	103	
11/2"	40	24	83	69	127	
2"	50	32	100	74.5	127	

Standard Specification

1. Design and manufacture: GB/T12237-2007
2. NPT connection: ASME B1.20.1
   G connection: GB/T 12716
   RC connection: GB/T 7306.2
3. Inspection and test: GB/T 13927-1992

Design Speciality

1. Standard locking handle, prevent misuse, be more safety and reliable.
2. Blowout proof stem
3. Reliable portable operation
4. Fire safe certified to API 607
5. Reduce port or full port
6. Anti-static device
7. Connection end: screw, SW, BW (Prolong Body)

Special Valve Performance Capabilities

Apply to fresh water, sewage, water, air, steam, food, medicine, chemicals, oils, acid and alkali and salts.



Main Parts and Materials

No.	Part name	Material			
1	Bonnet	WCB	CF8	CF8M	CF3
2	Sealing ring	PTFE/RP TFE/PPL/Carbon fiber			
3	Gasket	304+Gr		316+Gr	304L+Gr
4	Handle	304			
5	Spring shim	65Mn	304	316	304L
6	Nut	304			
7	Gland	304		316	304L
8	Packing	PTFE/Flexible Gr. /V Type			
9	Stem	F6a	304	17-4PH	304L
10	Gasket	PTFE/RPPFE			
11	Sealing ring	PTFE/RPPFE/PPL/1.Carbon fiber			
12	Body	WCB	CF8	CF8M	CF3

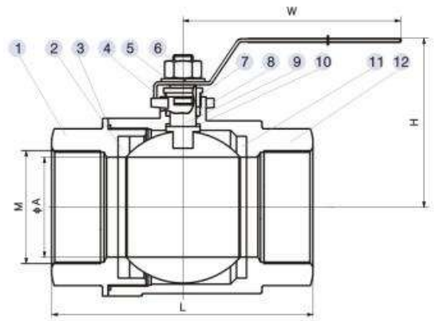

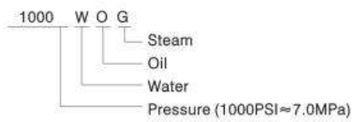

1000PSI Main Connection Size

NPS(in)	DN	ΦA	L	H	W	M
1/4"	6	10	55	50	95	NPT BSP G RC
3/8"	10	10	55	50	95	
1/2"	15	14.5	62	55	95	
3/4"	20	20	72	62	120	
1"	25	25	83	62	140	
11/4"	32	32	100	77	140	
11/2"	40	38	105	82	160	
2"	50	50	118	96	180	
21/2"	65	65	155	130	220	
3"	80	80	180	148	250	
4"	100	100	225	158	320	

Standard Specification

1. Design and Manufacture: GB/T 12237-2007
2. Body Wall Thickness: GB/T 12221
3. NPT thread end: ASME B1.20.1
   G thread end: GB/T 12716
   RC thread end: GB/T 7306.2
4. Socket Weld: ASME B16.11
5. Butt Weld: ASME B16.25,ASME B36.10M
6. Inspect and Test: GB/13927-1992

Design Speciality

1. Stopper on handle plus locking device for anti mis-operation and better security.
2. Blow out proof stem
3. Reliable and convenient operation
4. Entire API607 fire safe design
5. Bore type:full bore,reduced bore
6. Anti-static device between stem and ball
7. End connection:Thread,SW,BW(extended stem)

Special Valve Performance Capabilities

Suitable for fresh water,sewage,seawater,air,steam,food,pharmacy, chemical and various oil,Acid-Bases and salt medium etc.



Main Parts and Materials

No.	Part name	Material			
1	Bonnet	304	304	316	304L
2	Sealing Ring	PTFE/RP TFE/PPL/Carbon fiber			
3	Ball	A276 420	304	316	304L
4	Body	WCB	CF8	CF8M	CF3
5	Gasket	PTFE/RP TFE			
6	Paddings	PTFE/Flexible Gr. /V Type			
7	Stem	F6a	304	17-4PH	304L
8	Nut	A194 8			
9	Spring Washer	65Mn	304	316	304L
10	Handle	304			
11	Cover	304		316	304L
12	Bolt	A193 B7	A193 B8		
13	Nut	A194 2H	A193 8		

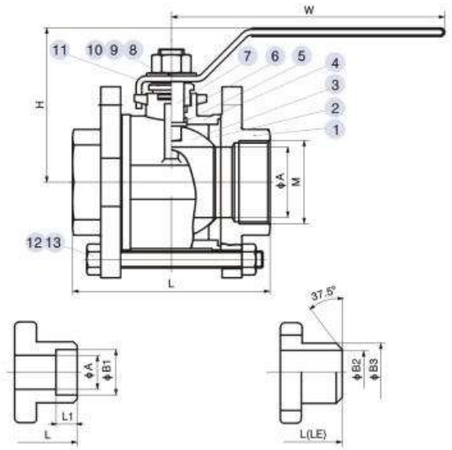

Socket weld (SW) connection

L(Ordinary butt welding end)
LE(Extended butt welding end)

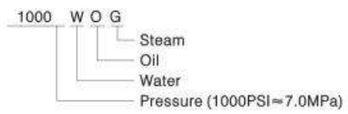

1000PSI Main Connection Size

NPS(in)	DN	ΦA	L	LE	H	W	L1	ΦB1	ΦB2	ΦB3	M
3/8"	10	10.5	68	160	48	100	10	17.6	10	23	NPT BSP G RC
1/2"	15	15	75	171	60	125	10	21.8	15	23	
3/4"	20	20	82	182	63	130	13	27.2	20	29	
1"	25	25	90	194	72.5	145	13	34	25	35	
11/4"	32	32	112	214	82.5	165	13	42.6	32	42	
11/2"	40	38	120	224	85	165	13	48.7	38	48	
2"	50	50	145	249	96.5	185	16	61.2	50	63	
21/2"	65	65	185	/	138	215	16	74	65	74	
3"	80	80	208	/	150	250	16	90	80	91	
4"	100	100	268	/	168	315	19	115.6	100	112	

Standard Specification

1. Design and Manufacture: GB/T 12237
2. Body Wall Thickness: GB/T 12224
3. NPT thread end: ASME B1.20.1
   G thread end: GB/T 12716
   RC thread end: GB/T 7306.2
4. Socket Weld: ASME B16.11
5. Butt Weld: ASME B16.25,ASME B36.10M
6. Inspect and Test: API 598

Design Speciality

1. Stopper on handle plus locking device for anti-misoperation and better security.
2. Blow out proof stem
3. Operating platforms connect with stopper directly and lock for anti-misoperation and better security.
4. Reliable and convenient operation
5. Entire API607 fire safe design
6. ISO5211:2000 operating platform(Top flange)
7. Anti-static device between stem and ball
8. End connection:Thread,SW,BW(extended body)

Special Valve Performance Capabilities

Suitable for fresh water,sewage,seawater,air,steam,food,pharmacy, chemical and various oil,Acid-Bases and salt medium etc.

Main Parts and Materials

No.	Part name	Material			
1	Body	WCB	CF8	CF8M	CF3
2	Bonnet	WCB	CF8	CF8M	CF3
3	Nut	A194 2H	A194 8		
4	Hexagon bolt	A193 B7	A193 B8		
5	Spring washer	65Mn	304		
6	Ball	A276 420	F 304	F 316	F 304L
7	Sealing Ring	PTFE/RPTFE/PPL/Carbon fiber			
8	Gasket	PTFE/RPTFE/PPL/Carbon fiber			
9	Body Sealing Ring	PTFE/RPTFE/PPL/Carbon fiber			
10	Stem	F6a	304	17-4PH	304L
11	Paddings	PTFE/Flexible Gr.			
12	Stem Gasket	PTFE/RPTFE/PPL/Carbon fiber			
13	Cover	304			
14	Disc spring	304			
15	Allen screw	A193 B7	A193 B8		
16	Handle	SS			
17	Loose resistant cover	304			
18	Nut	A194 2H	A193 B8		



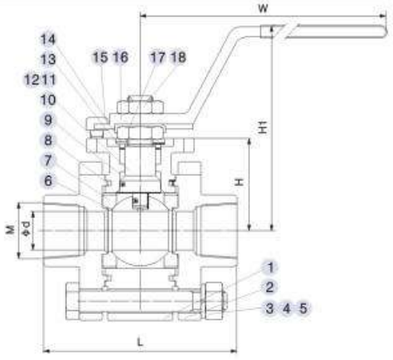

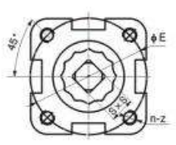

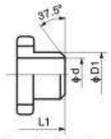

Extended butt (BW) connection

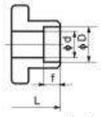

Longer socket weld (SW) connection

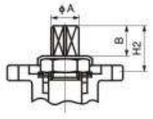

2000 W O G
- Steam
- Oil
- Water
- Pressure (2000PSI≈14.0MPa)

2000PSI Main Connection Size

NPS(in)	DN	L	L1	d	D1	D	f	H	H1	H2	S×S	B	ΦE	n-z	W	M
1/4"	6	70	90	10.5	21.3	14.3	10	31	74	17	Φ10×6	11.7	42	4-M5	135	NPT BSP G RC
3/8"	10	70	90	12.5	24.8	17.8	10	31	74	17	Φ10×6	11.7	42	4-M5	135	
1/2"	15	75	100	15	30.5	22	10	36	80	17	9×9	12	42	4-M5	135	
3/4"	20	82	120	20	36.5	27.3	13	38	84	20	9×9	13	42	4-M5	135	
1"	25	91	130	25	45	34	13	45	91	23	11×11	14	50	4-M6	170	
11/4"	32	112	140	32	53	42.8	13	50	98	23.5	11×11	14	50	4-M6	170	
11/2"	40	120	150	38	60	48.9	13	60	110	27	14×14	17	70	4-M8	200	
2"	50	140	190	45	62	61.4	16	68	116	27	14×14	16	70	4-M8	200	
21/2"	65	180	240	50	80	74.2	16	70	122	27	14×14	16	70	4-M8	200	
3"	80	210	260	65	108	90	16	102	190	50	17×17	36	102	4-M10	330	
4"	100	260	310	76	122	115.8	19	120	200	50	22×22	36	102	4-M10	400	

Note: two 1/4 "or 3/8" diameter stem for the flat side of the head.

Standard Specification

1. The design:GB/T 12237
2. Wall thickness: GB/T 12224
3. NPT threaded connection:ASME B1.20.1
   G threaded connection:GB/T 12716
   RC threaded connection:GB/T 7306.2
4. SW: ASME B16.11
5. BW: ASME B16.25,ASME B36.10M
6. Inspection and Testing: API 598

Design Speciality

1. Handle with locking devices to prevent wrong operation,which is safer.
2. Prevent stem from flying out
3. Reliable and convenient operation
4. Conform to API 607 fire-safe design
5. There are two kinds of valves' passage: full bore and reduced bore
6. Aantistatic device at the stem and ball joint
7. Connection mode: threaded connection,SW,BW(prolong the stem)

Special Valve Performance Capabilities

Suitable for fresh water, sewage, sea water, air, steam, food, medicines, chemicals, oil, acid and alkali, salt and so on

Main Parts and Materials

No.	Part name	Material			
1	Body	A105	F304	F316	F304L
2	Bonnet	A105	F304	F316	F304L
3	Gasket	PTFE/RPTFE/Carbon fiber			
4	seal ring	RPTFE/Nylon/Teflon			
5	Ball	A276 420	F304	F316	F304L
6	Gasket	PTFE/RPTFE/Carbon fiber			
7	Stem	F6a	304	17-4PH	304L
8	Packing	PTFE/Flexible graphite/Packing			
9	Gland	304			
10	Pin	304			
11	Nut	A194 8			
12	Handle	SS			



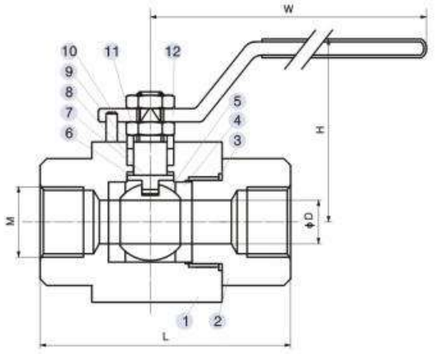

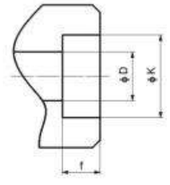

Main Connection Size

ANSI CLASS 800

NPS(in)	DN	L	D	K	f	H	W	M
3/8"	10	70	10	17.8	10	55	135	NPT BSP G RC
1/2"	15	75	13	22	10	55	135	
3/4"	20	90	17	27.3	13	55	135	
1"	25	115	25	34	13	70	170	
11/4"	32	124	32	42.8	13	78	210	
11/2"	40	150	38	48.9	13	88	220	
2"	50	150	50	61.4	16	108	220	
21/2"	65	190	65	74.2	16	125	220	
3"	80	205	76	90	16	147	400	
4"	100	330	100	115.8	19	200	600	

Standard Specification

1. Design: GB/T 12237-2007
2. Wall thickness: GB/T12224
3. NPT threaded connection : ASME B1.20.1
   G threaded connection: GB/T 12716
   Rc threaded connection: GB/T 7306.2
4. Socket Welding: ASME B16.11
5. Butt welding: ASME B 16.25, ASME B 36.10M
6. Inspection and test: According to API 598

Design speciality

1. Limit on the handle with locking device to prevent misoperation, More secure and reliable.
2. Blow our proof stem.
3. Easy to operate
4. Meet API 607 Anti-fire safe design
5. Anti-static device between stem and ball
6. Conneation: Screw, socket welding, butt welding (extend the valve body is accepted)

Special Valve Performance Capabilities

Suit for fresh water, sewage, sea water, air, steam, food machine, Pharmacy, Petrochemical, acid and alkali and salts.

Main Parts and Materials

No.	Part name	Material			
1	Body	A105	F304	F316	F304L
2	End cap	A105	F304	F316	F304L
3	Gasket	304+Gr			
4	Spring washer	65Mn	304		
5	Stud bolts	A193 B7	A193 B8		
6	Nut	A194 2H	A194 8		
7	Ball seat/ Seals	RPTFE/Mulon/Teflon			
8	Ball	A276 420	304	316	304L
9	Stem	F6a	304	17-4PH	304L
10	Stem gasket	PTFE/RPP TFE/Carbon fiber			
11	Packing	PRFE/Flexible Gr./V Type			
12	Packing gland	F304			
13	O-ring	NBR/VITON			
14	Socket head bolt	A193 B7	A193 B8		
15	Gland	WCB	CF8	CF8M	CF3
16	Handle	WCB+Zn			
17	Six angle flange nut	A194 2H	A194 8		



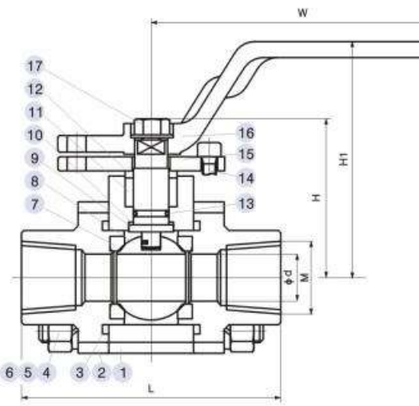

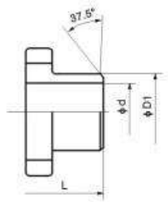

Butt weld ends (BW) connection

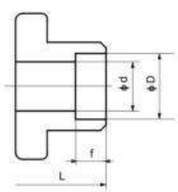

Socket weld (SW) connection

Main Connection Size

Class 800,1500Lb

DN	L	D	d	f	H	H1	W	D1	M
10	105	17.8	10	10	61	95	165	35	NPS BSP G Rc
15	105	22	15	10	61	95	165	35	
20	113	27.3	20	13	67	100	165	40	
25	125	34	25	13	70	100	165	48	
32	135	42.8	32	13	85	125	180	62	
40	160	48.9	38	13	95	135	200	66	
50	170	61.4	50	16	102	145	200	80	

Standard Specification

1. Design: GB/T 12237-2007
2. NPT threaded connection :ASME B1.20.1
   G threaded connection:GB/T 12716
   Rc threaded connection: GB/T 7306.2
3. Inspection and test: GB/T 13927-1992

Design Speciality

1. Limit on the handle with locking device to prevent misoperation, More secure and reliable.
2. Blow our proof stem.
3. Easy to operate
4. Meet API 607 Anti-fire safe design
5. Anti-static device between stem and ball
6. Conneation: Screw, socket welding, butt welding (extend the valve body is accepted)

Main Parts and Materials

No.	Part name	Material			
1	Body	WCB	CF8	CF8M	CF3
2	Gasket	304+Gr			
3	End cap	WCB	CF8	CF8M	CF3
4	Hexagon bolt	A193 B7	A193 B8		
5	Nut	A194 2H	A193 8		
6	Spring washer	65Mn	304		
7	Ball seat	A276 420	304	316	304L
8	Disc spring	Inconel X750			
9	Ball seat/ Seals	Flexible Gr.			
10	Ball	A276 420	F304	F316	F304L
11	Gasket	PTFE/RPTFE/Carbon fiber			
12	Stem	F6a	304	316	304L
13	Packing	Flexible Gr.			
14	Packing gland	WCB	CF8	CF8M	CF3
15	Socket head bolt	A193 B7	A193 B8		
16	Lever	CS/SS①			
17	Handle	CS/SS			

Note: ①CS for carbon steel, SS is stainless steel

Special Valve Performance Capabilities

1. The Ball and the seat using HVOF technology, sprayed superhard chromium carbide or tungsten carbide to the valve sealing surface to make the higest hardness of the ball and the ball seat reach to Rockwell 65. Also the thermal expansion coefficient of the coating and the ball are same and will not fall off when medium temperature changes a lot. If required, we can change the coating material according to your request, such as Cr-based alloy, Ni-based alloy, babbit alloy and Ceramics, ect.
2. The ball and the seat were one to one polished by advanced grinding machine with industrial diamond powder to make the sealing performance fulfilled with excellence.
3. Suit for high temperature, high pressure, corrosive environment, as well as the medium containing solids, fibrous material, the dust, high viscosity media, effective shearing and removal any particles and substances on the ball , to cut off and contral the media quickly.
4. Wear resistance, high temperature resistance(90 Deg-180 Deg) , erosion, corrosion resistance (salt corrosion, corrosion of acid, alkali corrosion, etc.), high pressure(6.4Mpa -42.0 Mpa)
5. Suit for fresh water, sewage, sea water, air, steam, food machine, Pharmacy , Petrochemical, acid and alkali and salts.

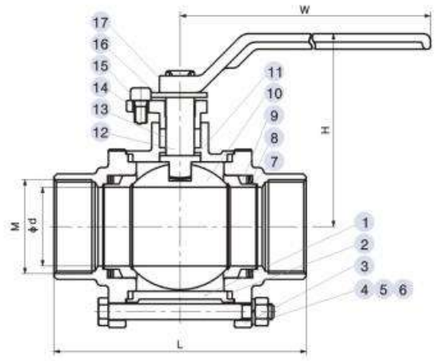

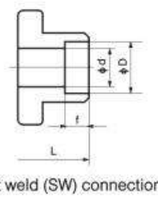

Socket weld (SW) connection

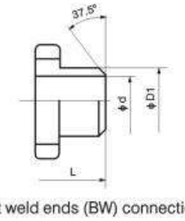

Butt weld ends (BW) connection

1000PSI Main Connection Size

DN	d	D1	D	L	f	H	W	M
15	15	24	21.8	88	10	65	125	NPT BSP G RC
20	20	29	27.1	101	13	71	130	
25	25	35	33.8	108	13	87	145	
32	32	43	42.6	124	13	104	165	
40	40	52	48.7	139	13	114	230	
50	50	62	61.1	160	16	124	230	
65	65	79	74.2	201	16	161.5	320	
80	80	95	89.8	227	16	170	320	
100	100	136	115.8	285	19	220	400	

Structure Features and Usage

The jacket ball valve has such features as small fluid resistance, compact structure, light weight, good heat and cold insulation performance, flexible opening and closing. The jacket ball valve adopts the integral structure, so it is much smaller than the ordinary ball valve, and its weight is much lighter with good sealing performance. The media that are allowed to pass the jacket include 1MPa steam or cooled water, or special design can be made according to user requirements. It is mainly used in various system in petroleum, chemical industry, metallurgy, pharmacy, food and other industries for transporting media of high viscosity that will be solidified under normal temperature.

The installation and tubing or the jacket ball valve shall be made according to the followings

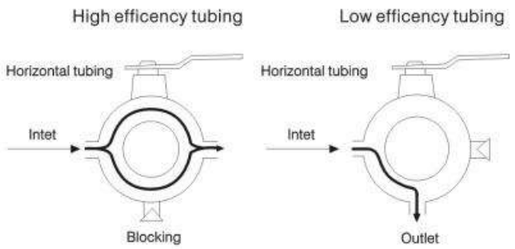



Part Materials and Main Parameters

Nominal diameter (in)			NPS 1/2~8				
Nominal pressure (MPa)			Class150~Class300				
Materials of parts	No.	Part Name	Material				
			Carbon steel	Stainless steel			
	1	Body	ASTM A216 WCB	ASTM A351 CF8	ASTM A351 CF8M	ASTM A351 CF3	ASTM A351 CF3M
	2	Seat	PTFE/PPL				
	3	Ball	ASTM A105 • ENP	ASTM A182 304	ASTM A182 316	ASTM A182 304L	ASTM A182 316L
	4	Stem	ASTM A182 F6A	ASTM A182 304	ASTM A182 316	ASTM A182 304L	ASTM A182 316L
	5	Packing	Graphite				
Applicable Series Conditions		Applicable media	Water, steam, oil, gas,liquefied gas, natural gas, etc.	Nitric acid	Acetic acid	Strong oxidizer	Urea
		Applicable temperature	≤120℃ (PTFE) 、≤250℃ (PPL)				
Design and manufacturing			API 608				
Face-to-face dimensions			ASME B16.10				
Type of connection			Flange	ASME B16.5		Wafer	ASME B16.5
Pressure test			API 598				
Transmission mode			Manual, worm and worm gear transmission, pneumatic, electric				

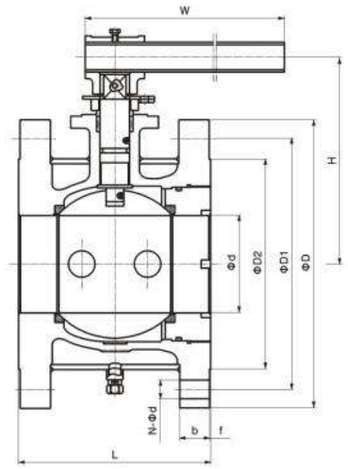

Pressure Rating	Nominal Diameter		Flange		d	L	Raised face flange						W	H	Weight (kg)
Class	NPS	DN	NPS	DN			D	D1	D2	f	b	N-Φd			
150	1/2"	15	1/2"x1 1/4"	15x32	13	108	115	89	64	2	11	4-Φ16	140	140	3
	3/4"	20	3/4"x1 1/2"	20x40	19	117	125	98.5	73	2	13	4-Φ16	140	150	4
	1"	25	1"x2"	25x50	25	127	150	120.5	92	2	14.5	4-Φ19	150	160	6
	1 1/4"	32	1 1/4"x2"	32x50	32	140	150	120.5	92	2	14.5	4-Φ19	180	180	8
	1 1/2"	40	1 1/2"x2 1/2"	40x65	38	165	180	139.5	105	2	16	4-Φ19	200	180	10
	2"	50	2"x3"	50x80	50	178	190	152.5	127	2	17.5	4-Φ19	250	200	14
	3"	80	3"x6"	80x150	75	229	280	241.5	216	2	24	8-Φ22	350	220	25
	4"	100	4"x8"	100x200	100	254	345	298.5	270	2	27	8-Φ22	500	250	36
	6"	150	6"x10"	150x250	150	292	405	362	324	2	29	12-Φ25	800	290	98
	8"	200	8"x14"	200x350	201	330	535	476	413	2	33.5	12-Φ29	1000	330	160
300	1/2"	15	1/2"x1 1/4"	15x32	13	108	135	98.5	64	2	17.5	4-Φ19	140	150	4
	3/4"	20	3/4"x1 1/2"	20x40	19	117	155	114.5	73	2	19.5	4-Φ22	140	160	5
	1"	25	1"x2"	25x50	25	127	165	127	92	2	21	8-Φ19	150	180	8
	1 1/4"	32	1 1/4"x2"	32x50	32	140	165	127	92	2	21	8-Φ19	180	200	10
	1 1/2"	40	1 1/2"x2 1/2"	40x65	38	165	190	149	105	2	24	8-Φ22	200	200	13
	2"	50	2"x3"	50x80	50	178	210	168.5	127	2	27	8-Φ22	250	220	18
	3"	80	3"x6"	80x150	75	229	320	270	216	2	35	12-Φ22	350	240	36
	4"	100	4"x8"	100x200	100	254	380	330	270	2	40	12-Φ25	500	270	58
	6"	150	6"x10"	150x250	150	292	445	387.5	324	2	46.5	16-Φ29	800	320	120
	8"	200	8"x14"	200x350	201	330	585	514.5	413	2	52.5	20-Φ32	1000	370	212

Note: The weight value is only for flanged valve. Please consult our factory for higher nominal diameter or weight. Amy modification to size H, H1and weight will not be notified otherwise.

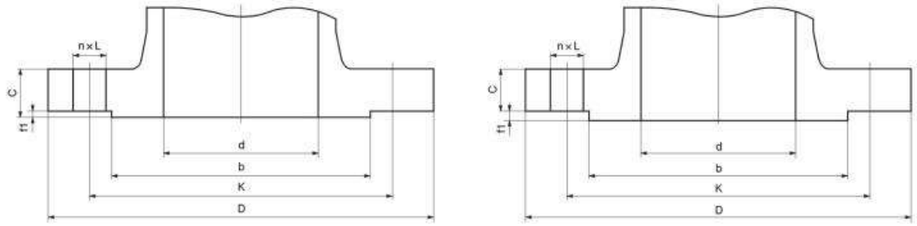

CLASS 150,300

CLASS 600,900,1500,2500

ASME B16.5-2003 The Flange Pipe Size

CLASS	NPS	Channel diameter d	Flag excircle D	Flag thickness C (exclude Rised face)	Rised face excircle b	Rised face f1	drilling centre dia.K	holes Small-Large n-L	Face to face acc. To ASME B16.10		
									R F	RJ	BW
150Lb	1/2	13	89	11.5	35	1.6	60.5	4-16	108	119	140
	3/4	19	98	11.5	43	1.6	70	4-16	117	130	152
	1	25	108	12	51	1.6	79.5	4-16	127	140	165
	1 1/4	32	117	13	64	1.6	89	4-16	140	153	178
	1 1/2	38	127	15	73	1.6	98.5	4-16	165	178	191
	2	49	152	16	92	1.6	120.5	4-19	178	191	216
	2 1/2	62	178	18	105	1.6	139.5	4-19	190	203	241
	3	74	190	19	127	1.6	152.5	4-19	203	216	283
	4	100	229	24	157	1.6	190.5	8-19	229	241	305
	5	127	254	24	186	1.6	216	8-22	356	369	381
	6	150	279	26	216	1.6	241.5	8-22	394	406	457
	8	201	343	29	270	1.6	298.5	8-22	457	470	521
	10	252	406	31	324	1.6	362	12-25	533	546	559
	12	303	483	32	381	1.6	432	12-25	610	622	635
	14	334	533	35	413	1.6	476	12-29	686	699	762
	16	385	597	37	470	1.6	540	16-29	762	775	838
	18	436	635	40	533	1.6	578	16-32	864	876	914
	20	487	699	43	584	1.6	635	20-32	914	927	991
	24	589	813	48	692	1.6	749.5	20-35	1067	1080	1143
300Lb	1/2	13	95	15	35	1.6	66.5	4-16	140	151	140
	3/4	19	117	16	43	1.6	82.5	4-19	152	165	152
	1	25	124	18	51	1.6	89	4-19	165	178	165
	1 1/4	32	133	19	64	1.6	98.5	4-19	178	191	178
	1 1/2	38	156	21	73	1.6	114.5	4-22	190	203	190
	2	49	165	23	92	1.6	127	8-19	216	232	216
	2 1/2	62	190	26	105	1.6	149	8-22	241	257	241
	3	74	210	29	127	1.6	168.5	8-22	283	299	283
	4	100	254	32	157	1.6	200	8-22	305	321	305
	5	127	279	35	186	1.6	235	8-22	381	397	381
	6	150	318	37	216	1.6	270	12-22	403	419	403
	8	201	381	42	270	1.6	330	12-25	502	518	521
	10	252	445	48	324	1.6	387.5	16-29	568	584	559
	12	303	521	51	381	1.6	451	16-32	648	664	635
	14	334	584	54	413	1.6	514.5	20-32	762	778	762
	16	385	648	58	470	1.6	571.5	20-35	838	854	838
	18	436	711	61	533	1.6	628.5	24-35	914	930	914
	20	487	775	64	584	1.6	686	24-35	991	1010	991
	24	589	914	70	692	1.6	813	24-41	1143	1165	1143

ASME B16.5-2003 The Flange Pipe Size

CLASS	NPS	Channel diameter d	Flag excircle D	Flag thickness C (exclude Rised face)	Rised face excircle b	Rised face f1	drilling centre dia.K	holes Small-Large n-L	Face to face acc. To ASME B16.10		
									R F	RJ	BW
600Lb	1/2	13	95	15	35	6.4	66.5	4-16	165	163	165
	3/4	19	118	16	43	6.4	82.5	4-19	190	190	190
	1	25	124	18	51	6.4	89	4-19	216	216	216
	1 1/4	32	133	21	64	6.4	98.5	4-19	229	229	229
	1 1/2	38	156	23	73	6.4	114.5	4-22	241	241	241
	2	49	165	26	92	6.4	127	8-19	292	295	292
	2 1/2	62	190	29	105	6.4	149	8-22	330	333	330
	3	74	210	32	127	6.4	168	8-22	356	359	356
	4	100	273	38	157	6.4	216	8-25	432	435	432
	5	127	330	45	186	6.4	266.5	8-29	508	511	508
	6	150	356	48	216	6.4	292	12-29	559	562	559
	8	201	419	56	270	6.4	349	12-32	660	664	660
	10	252	508	64	324	6.4	432	16-35	787	791	787
	12	303	559	67	381	6.4	489	20-35	838	841	838
	14	334	603	70	413	6.4	527	20-38	889	892	889
	16	385	686	77	470	6.4	603	20-41	991	994	991
	18	436	743	83	533	6.4	654	20-44	1092	1095	1092
	20	487	813	89	584	6.4	724	24-44	1194	1200	1194
	24	589	940	102	692	6.4	838	24-52	1397	1407	1397
900Lb	1/2	13	121	22.5	35	6.4	82.5	4-23	216	216	216
	3/4	19	130	25.5	43	6.4	88.9	4-23	229	229	229
	1	25	149	29	51	6.4	101.6	4-26	254	254	254
	1 1/4	32	159	29	64	6.4	111.1	4-26	279	279	279
	1 1/2	38	178	32	73	6.4	123.8	4-29	305	305	305
	2	49	216	38.5	92	6.4	165.1	8-26	368	371	368
	2 1/2	62	244	41.5	105	6.4	190.5	8-29	419	422	419
	3	74	241	38.5	127	6.4	190.5	8-26	381	384	381
	4	100	292	44.5	157	6.4	234.9	8-32	457	460	457
	5	127	349	51	186	6.4	279.4	8-35	559	562	559
	6	150	381	56	216	6.4	317.5	12-32	610	613	610
	8	201	470	63.5	270	6.4	393.7	12-39	737	740	737
	10	252	545	70	324	6.4	469.9	16-39	838	841	838
	12	303	610	79.5	381	6.4	533.4	20-39	965	968	965
	14	322	640	86	413	6.4	558.8	20-42	1029	1038	1029
	16	373	705	89	470	6.4	615.9	20-45	1130	1140	1130
	18	423	785	102	533	6.4	685.8	20-51	1219	1232	1219
	20	471	855	108	584	6.4	749.3	20-54	1321	1334	1321
	24	570	1040	140	692	6.4	901.7	20-67	1549	1568	1549

ASME B16.5-2003 The Flange Pipe Size

CLASS	NPS	Channel diameter d	Flag excircle D	Flag thickness C (exclude Rised face)	Rised face excircle b	Rised face f1	drilling centre dia.K	holes Small-Large n-L	Face to face acc. To ASME B16.10		
									R F	RJ	BW
1500Lb	1/2	13	121	22.5	35	6.4	82.5	4-23	216	216	216
	3/4	19	130	25.5	43	6.4	88.9	4-23	229	229	229
	1	25	149	29	51	6.4	101.6	4-26	254	254	254
	1 1/4	32	159	29	64	6.4	111.1	4-26	279	279	279
	1 1/2	38	178	32	73	6.4	123.8	4-29	305	305	305
	2	49	216	38.5	92	6.4	165.1	8-26	368	371	368
	2 1/2	62	244	41.5	105	6.4	190.5	8-29	419	422	419
	3	74	267	48	127	6.4	203.2	8-32	470	473	470
	4	100	311	54	157	6.4	241.3	8-35	546	549	546
	5	125	375	73.5	186	6.4	292.1	8-42	673	676	673
	6	144	394	83	216	6.4	317.5	12-39	705	711	705
	8	192	483	92.9	270	6.4	393.7	12-45	832	841	832
	10	239	585	108	324	6.4	482.6	12-51	991	1000	991
	12	287	675	124	381	6.4	571.5	16-54	1130	1146	1130
	14	315	750	133.5	413	6.4	635	16-61	1257	1276	1257
	16	360	825	146.5	470	6.4	704.8	16-67	1384	1407	1384
	18	/	915	162	533	6.4	774.7	16-74	/	/	/
	20	/	985	178	584	6.4	831.8	16-80	/	/	/
	24	/	1170	203.5	692	6.4	990.6	16-93	/	/	/
2500Lb	1/2	13	133	30.5	35	6.4	88.9	4-22	264	264	264
	3/4	19	140	32	43	6.4	95.3	4-22	273	273	273
	1	25	159	35.5	51	6.4	108	4-26	308	308	308
	1 1/4	32	184	38.5	64	6.4	130	4-29	349	352	349
	1 1/2	38	203	44.5	73	6.4	146.1	4-32	384	387	384
	2	42	235	50.8	92	6.4	171.5	8-29	451	454	451
	2 1/2	52	267	57.2	105	6.4	196.9	8-32	508	514	508
	3	62	305	66.6	127	6.4	228.6	8-35	578	584	578
	4	87	356	76.2	157	6.4	273.1	8-41	673	683	673
	5	100	419	92	186	6.4	323.9	8-48	794	807	794
	6	131	483	108	216	6.4	368.3	8-54	914	927	914
	8	179	553	127	270	6.4	438.2	12-54	1022	1038	1022
	10	223	673	165.1	324	6.4	539.8	12-67	1270	1292	1270
	12	265	762	184.2	381	6.4	619.3	12-73	1422	1445	1422

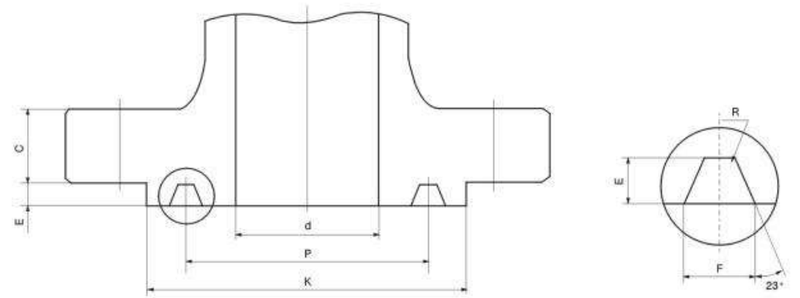

ASME B16.5-2003Flange Size of Ring Joint Sealing Surface (RTJ,RJ)

CLASS	NSP	Channel diameter d	Ring number	Pitch diameter P		Groove depth E		Groove width F		The bottom of the channel radius R	Protuberant part diameter K	Thickness of the flangeC
				in	mm	in	mm	in	mm			
150Lb	1/2	13	/	/	/	/	/	/	/	/	/	/
	3/4	19	/	/	/	/	/	/	/	/	/	/
	1	25	R15	1.875	47.625	0.25	6.35	0.344	8.74	0.8	63.5	12
	1 1/4	32	R17	2.25	57.15	0.25	6.35	0.344	8.74	0.8	73.2	13
	1 1/2	38	R19	2.562	65.075	0.25	6.35	0.344	8.74	0.8	82.6	15
	2	49	R22	3.25	82.55	0.25	6.35	0.344	8.74	0.8	101.6	16
	2 1/2	62	R25	4	101.6	0.25	6.35	0.344	8.74	0.8	120.7	18
	3	74	R29	4.5	114.3	0.25	6.35	0.344	8.74	0.8	133.4	19
	4	100	R36	5.875	149.23	0.25	6.35	0.344	8.74	0.8	171.5	24
	5	127	R40	6.75	171.45	0.25	6.35	0.344	8.74	0.8	193.5	24
	6	150	R43	7.625	193.68	0.25	6.35	0.344	8.74	0.8	218.9	26
	8	201	R48	9.75	247.65	0.25	6.35	0.344	8.74	0.8	273.1	29
	10	252	R52	12	304.8	0.25	6.35	0.344	8.74	0.8	330.2	31
	12	303	R56	15	381	0.25	6.35	0.344	8.74	0.8	406.4	32
	14	334	R59	15.625	396.88	0.25	6.35	0.344	8.74	0.8	425.5	35
	16	385	R64	17.875	454.03	0.25	6.35	0.344	8.74	0.8	482.6	37
	18	436	R68	20.375	517.53	0.25	6.35	0.344	8.74	0.8	546.1	40
	20	487	R72	22	558.8	0.25	6.35	0.344	8.74	0.8	596.9	43
	24	589	R76	26.5	673.1	0.25	6.35	0.344	8.74	0.8	711.2	48

ASME B16.5-2003Flange Size of Ring Joint Sealing Surface (RTJ,RJ)

CLASS	NSP	Channel diameter d	Ring number	Pitch diameter P		Groove depth E		Groove width F		The bottom of the channel radius R	Protuberant part diameter K	Thickness of the flangeC
				in	mm	in	mm	in	mm			
300Lb	1/2	13	R11	1.344	34.138	0.219	5.56	0.281	7.14	0.8	50.8	15
	3/4	19	R13	1.688	42.875	0.25	6.35	0.344	8.74	0.8	63.5	16
	1	25	R16	2	50.8	0.25	6.35	0.344	8.74	0.8	69.9	18
	1 1/4	32	R18	2.375	60.325	0.25	6.35	0.344	8.74	0.8	79.2	19
	1 1/2	38	R20	2.688	68.275	0.25	6.35	0.344	8.74	0.8	90.4	21
	2	49	R23	3.25	82.55	0.312	7.92	0.469	11.91	0.8	108.0	23
	2 1/2	62	R26	4	101.6	0.312	7.92	0.469	11.91	0.8	127.0	26
	3	74	R31	4.875	123.83	0.312	7.92	0.469	11.91	0.8	146.1	29
	4	100	R37	5.875	149.23	0.312	7.92	0.469	11.91	0.8	174.8	32
	5	127	R41	7.125	180.98	0.312	7.92	0.469	11.91	0.8	209.6	35
	6	150	R45	8.312	211.12	0.312	7.92	0.469	11.91	0.8	241.3	37
	8	201	R49	10.625	269.88	0.312	7.92	0.469	11.91	0.8	301.8	42
	10	252	R53	12.75	323.85	0.312	7.92	0.469	11.91	0.8	355.6	48
	12	303	R57	15	381	0.312	7.92	0.469	11.91	0.8	412.8	51
	14	334	R60	16.5	419.1	0.312	7.92	0.469	11.91	0.8	457.2	54
	16	385	R65	18.5	469.9	0.312	7.92	0.469	11.91	0.8	508.0	58
	18	436	R69	21	533.4	0.312	7.92	0.469	11.91	0.8	574.5	61
	20	487	R73	23	584.2	0.375	9.53	0.531	13.49	1.5	635.0	64
	24	589	R77	27.25	692.15	0.438	11.13	0.656	16.66	1.5	749.3	70
600Lb	1/2	13	R11	1.344	34.138	0.219	5.56	0.281	7.14	0.8	50.8	15
	3/4	19	R13	1.688	42.875	0.25	6.35	0.344	8.74	0.8	63.5	16
	1	25	R16	2	50.8	0.25	6.35	0.344	8.74	0.8	69.9	18
	1 1/4	32	R18	2.375	60.325	0.25	6.35	0.344	8.74	0.8	79.2	21
	1 1/2	38	R20	2.688	68.275	0.25	6.35	0.344	8.74	0.8	90.4	23
	2	49	R23	3.25	82.55	0.312	7.92	0.469	11.91	0.8	108.0	26
	2 1/2	62	R26	4	101.6	0.312	7.92	0.469	11.91	0.8	127.0	29
	3	74	R31	4.875	123.83	0.312	7.92	0.469	11.91	0.8	146.1	32
	4	100	R37	5.875	149.23	0.312	7.92	0.469	11.91	0.8	174.8	38
	5	127	R41	7.125	180.98	0.312	7.92	0.469	11.91	0.8	209.6	45
	6	150	R45	8.312	211.12	0.312	7.92	0.469	11.91	0.8	241.3	48
	8	201	R49	10.625	269.88	0.312	7.92	0.469	11.91	0.8	301.8	56
	10	252	R53	12.75	323.85	0.312	7.92	0.469	11.91	0.8	355.6	64
	12	303	R57	15	381	0.312	7.92	0.469	11.91	0.8	412.8	67
	14	334	R60	16.5	419.1	0.312	7.92	0.469	11.91	0.8	457.2	70
	16	385	R65	18.5	469.9	0.312	7.92	0.469	11.91	0.8	508.0	77
	18	436	R69	21	533.4	0.312	7.92	0.469	11.91	0.8	574.5	83
	20	487	R73	23	584.2	0.375	9.53	0.531	13.49	1.5	635.0	89
	24	589	R77	27.25	692.15	0.438	11.13	0.656	16.66	1.5	749.3	102

ASME B16.5-2003Flange Size of Ring Joint Sealing Surface (RTJ,RJ)

CLASS	NSP	Channel diameter d	Ring number	Pitch diameter P		Groove depth E		Groove width F		The bottom of the channel radius R	Protuberant part diameter K	Thickness of the flangeC
				in	mm	in	mm	in	mm			
900Lb	1/2	13	R12	1.562	39.675	0.25	6.35	0.344	8.74	0.8	60.5	22.5
	3/4	19	R14	1.75	44.45	0.25	6.35	0.344	8.74	0.8	66.5	25.5
	1	25	R16	2	50.8	0.25	6.35	0.344	8.74	0.8	71.4	29
	1 1/4	32	R18	2.375	60.325	0.25	6.35	0.344	8.74	0.8	81.0	29
	1 1/2	38	R20	2.688	68.275	0.25	6.35	0.344	8.74	0.8	91.9	32
	2	49	R24	3.75	95.25	0.312	7.92	0.469	11.91	0.8	124.0	38.5
	2 1/2	62	R27	4.25	107.95	0.312	7.92	0.469	11.91	0.8	136.7	41.5
	3	74	R31	4.875	123.83	0.312	7.92	0.469	11.91	0.8	155.4	38.5
	4	100	R37	5.875	149.23	0.312	7.92	0.469	11.91	0.8	180.8	44.5
	5	127	R41	7.125	180.98	0.312	7.92	0.469	11.91	0.8	215.9	51
	6	150	R45	8.312	211.12	0.312	7.92	0.469	11.91	0.8	241.3	56
	8	201	R49	10.625	269.88	0.312	7.92	0.469	11.91	0.8	307.8	63.5
	10	252	R53	12.75	323.85	0.312	7.92	0.469	11.91	0.8	362.0	70
	12	303	R57	15	381	0.312	7.92	0.469	11.91	0.8	419.1	79.5
	14	322	R62	16.5	419.1	0.438	11.13	0.656	16.66	1.5	466.9	86
	16	373	R66	18.5	469.9	0.438	11.13	0.656	16.66	1.5	523.7	89
	18	423	R70	21	533.4	0.5	12.70	0.781	19.84	1.5	593.9	102
	20	471	R74	23	584.2	0.5	12.70	0.781	19.84	1.5	647.7	108
	24	570	R78	27.25	692.15	0.625	15.88	1.062	26.97	2.3	771.7	140
1500Lb	1/2	13	R12	1.562	39.675	0.25	6.35	0.344	8.74	0.8	60.5	22.5
	3/4	19	R14	1.75	44.45	0.25	6.35	0.344	8.74	0.8	66.5	25.5
	1	25	R16	2	50.8	0.25	6.35	0.344	8.74	0.8	71.4	29
	1 1/4	32	R18	2.375	60.325	0.25	6.35	0.344	8.74	0.8	81.0	29
	1 1/2	38	R20	2.688	68.275	0.25	6.35	0.344	8.74	0.8	91.9	32
	2	49	R24	3.75	95.25	0.312	7.92	0.469	11.91	0.8	124.0	38.5
	2 1/2	62	R27	4.25	107.95	0.312	7.92	0.469	11.91	0.8	136.7	41.5
	3	74	R35	5.375	136.53	0.312	7.92	0.469	11.91	0.8	168.1	48
	4	100	R39	6.375	161.93	0.312	7.92	0.469	11.91	0.8	193.5	54
	5	125	R44	7.625	193.68	0.312	7.92	0.469	11.91	0.8	228.6	73.5
	6	144	R46	8.312	211.12	0.375	9.53	0.531	13.49	1.5	247.7	83
	8	192	R50	10.625	269.88	0.438	11.13	0.656	16.66	1.5	317.5	92.9
	10	239	R54	12.75	323.85	0.438	11.13	0.656	16.66	1.5	371.3	108
	12	287	R58	15	381	0.562	14.27	0.906	23.01	1.5	438.2	124
	14	315	R63	16.5	419.1	0.625	15.88	1.062	26.97	2.3	489.0	133.5
	16	360	R67	18.5	469.9	0.688	17.48	1.188	30.18	2.3	546.1	146.5
	18	/	R71	21	533.4	0.688	17.48	1.188	30.18	2.3	612.6	162
	20	/	R75	23	584.2	0.688	17.48	1.312	33.32	2.3	673.1	178
	24	/	R79	27.25	692.15	0.812	20.62	1.438	36.53	2.3	793.8	203.5
2500Lb	1/2	13	R13	1.688	42.875	0.25	6.35	0.344	8.74	0.8	65.0	30.5
	3/4	19	R16	2	50.8	0.25	6.35	0.344	8.74	0.8	73.2	32
	1	25	R18	2.375	60.325	0.25	6.35	0.344	8.74	0.8	82.6	35.5
	1 1/4	32	R21	2.844	72.238	0.312	7.92	0.469	11.91	0.8	101.6	38.5
	1 1/2	38	R23	3.25	82.55	0.312	7.92	0.469	11.91	0.8	114.3	44.5
	2	42	R26	4	101.6	0.312	7.92	0.469	11.91	0.8	133.4	50.8
	2 1/2	52	R28	4.375	111.13	0.375	9.53	0.531	13.49	1.5	149.4	57.2
	3	62	R32	5	127	0.375	9.53	0.531	13.49	1.5	168.1	66.6
	4	87	R38	6.188	157.18	0.438	11.13	0.656	16.66	1.5	203.2	76.2
	5	100	R42	7.5	190.5	0.5	12.70	0.781	19.84	1.5	241.3	92
	6	131	R47	9	228.6	0.5	12.70	0.781	19.84	1.5	279.4	108
	8	179	R51	11	279.4	0.562	14.27	0.906	23.01	1.5	339.9	127
	10	223	R55	13.5	342.9	0.688	17.48	1.188	30.18	2.3	425.5	165.1
	12	265	R60	16	406.4	0.688	17.48	1.312	33.32	2.3	495.3	184.2

Selection of Ball Valve

1. Ball Valves are mainly divided into two types, i.e. floating ball valve and trunnion ball valve. The former is simple in design and low in price, however, its operation torque is bigger comparing to that of the trunnion ball valve with same diameter. In general, floating ball valve is Adopted for valves of small and medium diameter. On the contrary, trunnion ball valve is relatively higher in price, and smaller in operation torque. So valves with bigger diameters are employing generally the design structure of trunnion ball valve. The following table of ball valve tructures relating to each pressure rating is recommended by TEJI to customers for reference when selecting ball valves. The applicable scope of metal to metal sealed ball valve with floating ball is narrower due to its bigger operation torque.
2. Regarding trunnion ball valve, if customers have no special requirement, it is suggested that TEJI make decision based on its own processing technique to employ the structure of either two piece or three piece body. Generally, TEJI adopts two piece body design for ball valve ⩽DN350 (NPS14), and three piece design for ball valve ⩾DN400(NPS16).
3. There are two types of design structure of metal to metal sealed ball valves, i.e., high temperature and general temperature structure, which should be specified by customers when ordering.

Normal pressure or rating	Valve category							
	Soft sealed、Full bore		Soft sealed、Reduced bore		Metal to metal sealed, Full bore		Metal to metal sealed, Reduced bore	
	Ball valve design structure recommended							
	Floating ball	Trunnion ball	Floating ball	Trunnion ball	Floating ball	Trunnion ball	Floating ball	Trunnion ball
Class150 PN20	⩽DN150 ⩽NPS6	⩾DN200 ⩾NPS8	⩽DN200 ⩽NPS8	⩾DN250 ⩾NPS10	⩽DN100 ⩽NPS4	⩾DN125 ⩾NPS5	⩽DN125 ⩽NPS5	⩾DN150 ⩾NPS6
Class300 PN50	⩽DN125 ⩽NPS5	⩾DN150 ⩾NPS6	⩽DN150 ⩽NPS6	⩾DN200 ⩾NPS8	⩽DN80 ⩽NPS3	⩾DN100 ⩾NPS4	⩽DN100 ⩽NPS4	⩾DN125 ⩾NPS5
Class600 PN110	⩽DN80 ⩽NPS3	⩾DN100 ⩾NPS4	⩽DN100 ⩽NPS4	⩾DN125 ⩾NPS5	⩽DN50 ⩽NPS2	⩽DN65 ⩽NPS2 1/2	⩽DN65 ⩽NPS2 1/2	⩾DN80 ⩾NPS3
Class900 PN150	⩽DN50 ⩽NPS2	⩽DN65 ⩽NPS2 1/2	⩽DN65 ⩽NPS2 1/2	⩾DN80 ⩾NPS3	⩽DN40 ⩽NPS1 1/2	⩾DN50 ⩾NPS2	⩽DN50 ⩽NPS2	⩽DN65 ⩽NPS2 1/2
Class1500 PN260	⩽DN40 ⩽NPS1 1/2	⩾DN50 ⩾NPS2	⩽DN50 ⩽NPS2	⩾DN50 ⩾NPS2	⩽DN40 ⩽NPS1 1/2	⩾DN50 ⩾NPS2	⩽DN50 ⩽NPS2	⩽DN65 ⩽NPS2 1/2
Class2500 PN420	Not recommended	⩽DN40 ⩽NPS1 1/2	Not recommended	⩽DN65 ⩽NPS2 1/2	⩽DN32 ⩽NPS2 1/2	⩽DN40 ⩽NPS1 1/2	⩽DN40 ⩽NPS1 1/2	⩾DN50 ⩾NPS2
PN16	⩽DN150	⩾DN200	⩽DN200	⩾DN250	⩽DN100	⩾DN125	⩽DN125	⩾DN150
PN25	⩽DN150	⩾DN200	⩽DN200	⩾DN250	⩽DN100	⩾DN125	⩽DN125	⩾DN150
PN40	⩽DN125	⩾DN150	⩽DN150	⩾DN200	⩽DN80	⩾DN100	⩽DN100	⩾DN125
PN63	⩽DN100	⩾DN125	⩽DN125	⩾DN150	⩽DN50	⩾DN65	⩽DN65	⩾DN80
PN100	⩽DN100	⩾DN125	⩽DN125	⩾DN150	⩽DN50	⩾DN65	⩽DN65	⩾DN80
PN160	⩽DN50	⩾DN65	⩽DN65	⩾DN80	⩽DN40	⩾DN50	⩽DN50	⩾DN65

Selection Table of Ball Valve

DN	mm		PN	MPa
Operating Temperature	℃		Working Pressure	MPa
Suitable medium				
Valve type	☐Through Ball ☐Metal to metal sealing floating ball valve ☐Biased half ball valve ☐V-shaped regulating ball valve ☐Low temperature ball valve ☐Wafer type ball valve	☐Three way ball valve ☐Ceramics ball valve ☐Pressed open metal seated ball valve ☐Wafer type thin ball valve	☐Four way ball valve ☐Unload type ball valve ☐Orbit ball valve ☐Jacketed ball valve ☐Other	
Structure	☐Float ball ☐Fixed ball		☐Single Seat ☐Double Seat	
Connection type	☐Flange ☐Butt welding ☐Undertake welding ☐Screw thread			
Driven type	☐Manual	☐Wrench ☐Handwheel		
	☐Electric	Supply voltage	V	
		Explosion levels		
	☐Pneumatic	Air pressure	MPa	
		Control mode	☐Single-acting ☐Double acting	
		Solenoid valve voltage	Explosion-proof level of solenoid valve	
	☐Hydraulic	Oil Supply Pressure	MPa	
		Control mode	☐Single-acting ☐Double acting	
		Solenoid valve voltage	Explosion-proof level of solenoid valve	
Opening and closing time	S	Frequency		
Material requirements	Body	☐Cast iron ☐Carbon Steel ☐Stainless steel		
	Ball	☐Carbon Steel ☐Stainless steel		
	Sealing	☐Rubber ☐Plastic ☐Metal ☐Ceramics		
Functional requirements	Power off	☐Keep position ☐Close ☐Open		
	Loss of air	☐Keep position ☐Close ☐Open		
	With signal feedback	☐Yes ☐No		
	With locking device	☐Yes ☐No		
Usage				

Ball Valve Flow Coefficient Specification

DN	NPS	PN	Class	PN	Class	PN	Class	PN	Class	PN	Class	PN	Class
		16/25	150	40	300	100	600	150	900	250	1500	420	2500
15	1/2	25		25		20		16		16		16	
20	3/4	56		56		40		34		34		32	
25	1	95		95		64		55		55		50	
40	11/2	308		308		308		165		165		160	
50	2	420		420		400		330		330		250	
65	21/2	690		690		610		520		510		320	
80×50	3×2	200		200		200		190		180		200	
80	3	1200		1050		1000		910		820		500	
100×80	4×3	600		600		600		590		550		560	
100	4	2200		2100		1850		1800		1700		1100	
150×100	6×4	800		800		790		790		780		745	
150	6	5150		5100		4600		4380		3800		2500	
200×150	8×6	2150		2150		2150		2150		2150		2150	
200	8	9500		9400		9000		8500		7400		5300	
250×200	10×8	4300		4300		4300		4450		4450		4100	
250	10	15000		15000		14700		14500		11500		8300	
300×250	12×10	7550		7550		7550		8000		9000		7550	
350×250	14×10	6000		6000		6000		6100		6100		/	
300	12	23000		23000		22500		21100		18000		13000	
350×300	14×12	14000		14000		14000		12800		13000		/	
400×300	16×12	9100		9100		9100		8900		8900		/	
350	14	28000		28000		28000		25000		21000		/	
400×350	16×14	15000		15000		15000		14200		14100		/	
400	16	37200		37200		37200		34500		27500		/	
450×400	18×16	21000		21000		21000		19200		19000		/	
500×400	20×16	15300		15300		15300		13800		12000		/	
450	18	49000		49000		49000		45000		37000		/	
500×450	20×18	28400		28400		28400		25000		25000		/	
500	20	59000		59000		59000		55200		47800		/	
600×500	24×20	28200		28200		28000		25100		20600		/	
550	22	68200		68200		68200		62000		54000		/	
600	24	92000		92000		92000		83800		70000		/	
750×600	30×24	36000		36000		36000		32900		/		/	
650	26	110000		110000		110000		98500		/		/	
700	28	121000		121000		121000		113000		/		/	
750	30	145000		144000		144000		130000		/		/	
900×750	36×30	64000		64000		64000		61500		/		/	
800	32	170000		170000		170000		151000		/		/	
900×800	36×32	87000		87000		87000		69500		/		/	
900	36	210000		210000		210000		198200		/		/	
1000	40	267500		267500		267500		/		/		/	
1050×900	42×36	96700		96700		96000		/		/		/	
1050	42	280000		280000		280000		/		/		/	
1200	48	384000		384000		384000		/		/		/	
1400×1050	56×42	89000		89000		89000		/		/		/	
1400	56	521000		521000		521000		/		/		/	